Radio control model

KING QUEST 100

ALL BALSA, PLYWOOD CONSTRUCTION AND ALMOST READY TO FLY

Instruction manual

SPECIFICATIONS

Wingspan:.....2210mm
Length:.....1580mm
Electric Motor:.....2300-2500w
Glow Engine:.....90-120 2-T / 120 4-T
RTF Weight: 5.8-6.1kg (Will vary with Equipment Used).
Radio:.....Minimum 7 Channels / 9 Servos
Function: Ailerons-Elevator-Rudder-Throttle Flaps.

WARNING! This radio controlled model is NOT a toy. If modified or flown carelessly it could go out of controll and cause serious human injury or property damage. Before flying your airplane, ensure the air field is spacious enough. Always fly it outdoors in safe areas and seek professional advice if you are unexperienced.

RADIO CONTROL MODEL®

REQUIRED FOR OPERATION (Purchase separately)

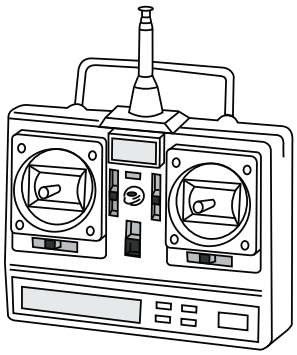

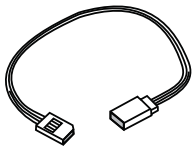

Servo extension cord
700mm for Aileron servos (2pcs)
400mm for Flap servos (2pcs)
600mm for Elevator and Rudder servos (3pcs)

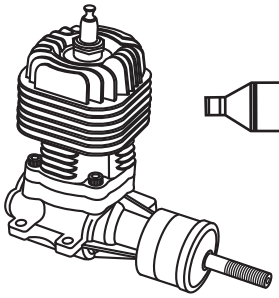

26cc Gas Engine

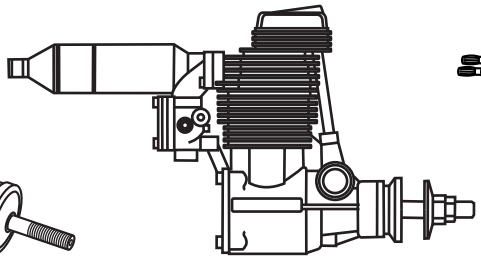

120-4T Glow Engine

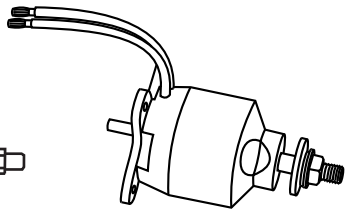

2300-2500 Watt

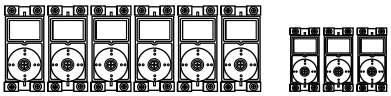

Minimum 7 channels radio for airplane with 9 servos

6 standard servo for Aileron. Flap, Nose gear and Throttle
3 mini servo (3x19gr) for Rudder and Elevator (2pcs).

Silicone tube (in case of Gas or Glow engine using)

GLUE (Purchase separately)

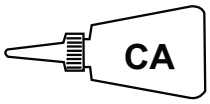

Cyanoacrylate Glue

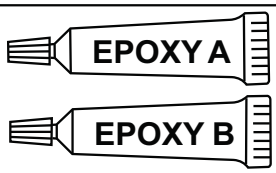

Epoxy Glue (5 minute type)
Epoxy Glue (30 minute type)

TOLLS REQUIRED (Purchase separately)

Hobby knife

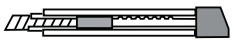

Needle nose Pliers

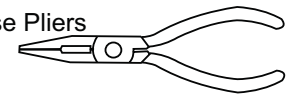

Sander

Phillip screw driver

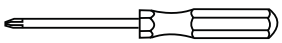

Scissors

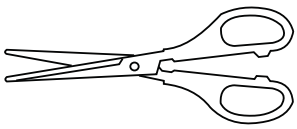

Hex Wrench

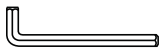

Awl

Wire Cutters

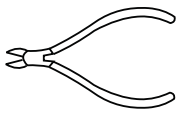

Masking tape - Straight Edged Ruler - Pen or pencil - Drill and Assorted Drill Bits

If exposed to direct sunlight and/or heat, wrinkels can appear. Storing the model in a cool place will let the wrinkles disappear. Otherwise, remove wrinkles in covering film with a hair dryer, starting with low temperature. You can fix the corners by using a hot iron.

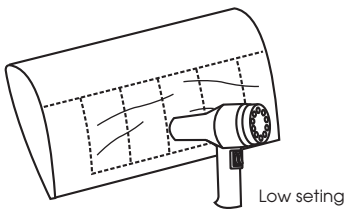

Symbols used throughout this instruction manual, comprise:

- 1.5mm — Drill holes using the stated size of drill (in this case 1.5 mm ÿ)
- ! — Take particular care here
- Hatched-in areas: remove covering film carefully
- Check during assembly that these parts move freely, without binding
- A B — Use epoxy glue
- CA — Apply cyano glue
- L/R — Assemble left and right sides the same way.
- X — Not included. These parts must be purchased separately

Read through the manual before you begin, so you will have an overall idea of what to do.

CONVERSION TABLE

1.0mm = 3/64”	3.0mm = 1/8”	10mm = 13/32”	25mm = 1”
1.5mm = 1/16”	4.0mm = 5/32”	12mm = 15/32”	30mm = 1-3/16”
2.0mm = 5/64”	5.0mm = 13/64”	15mm = 19/32”	45mm = 1-51/64”
2.5mm = 3/32”	6.0mm = 15/64”	20mm = 51/64”	

KING QUEST 100 1-Nose gear mount

1- Slide one end of the 2x500mm white plastic tube into the pre-drilled hole on the right side of the nose gear mount, the end of the plastic tube fits across the front of the fire-wall. The other end of the plastic tube leads to where the nose gear servo arm will be.

2- Hold the end of the plastic tube firmly to fire-wall with thin CA glue.

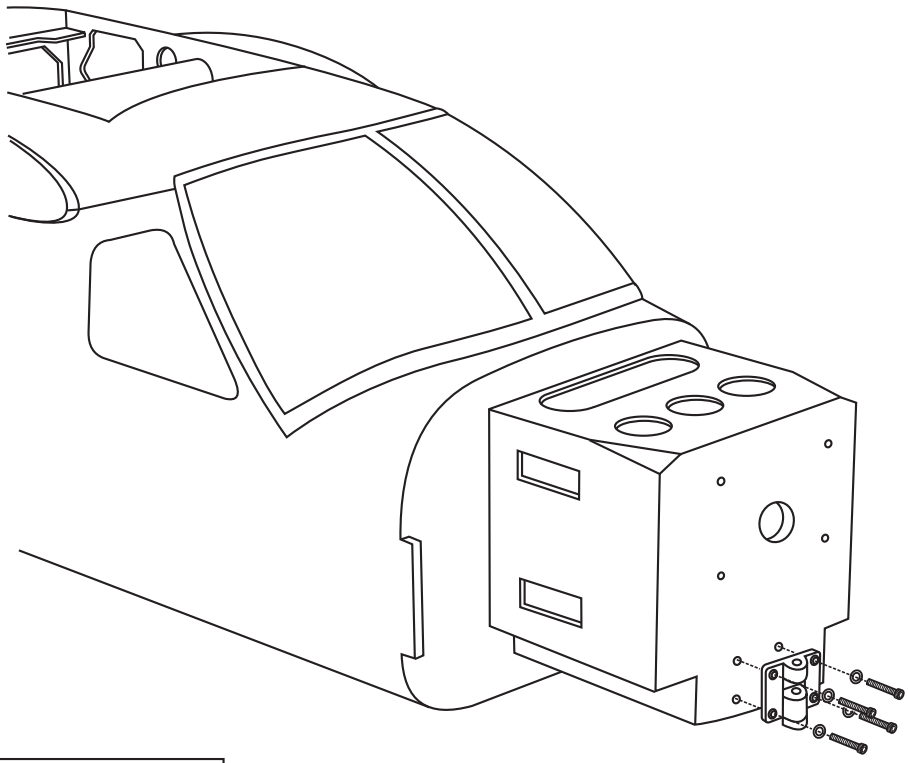

Nose gear mount

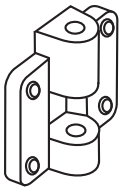

.....1

3x20mm hexagonal bolt

.....4

3mm nut / washer

.....4

2-Installing the nose gear & nose gear arm

1- Thread one end with the Z bend of the nose gear push rod into the hole on the nose gear control horn (Step 1).

2- Thread the other end of the nose gear push rod into the white plastic.

3- Put the nose gear control horn in place with the screw hole facing foward (Step 2).

4- Put the nose gear in place (Step 3).

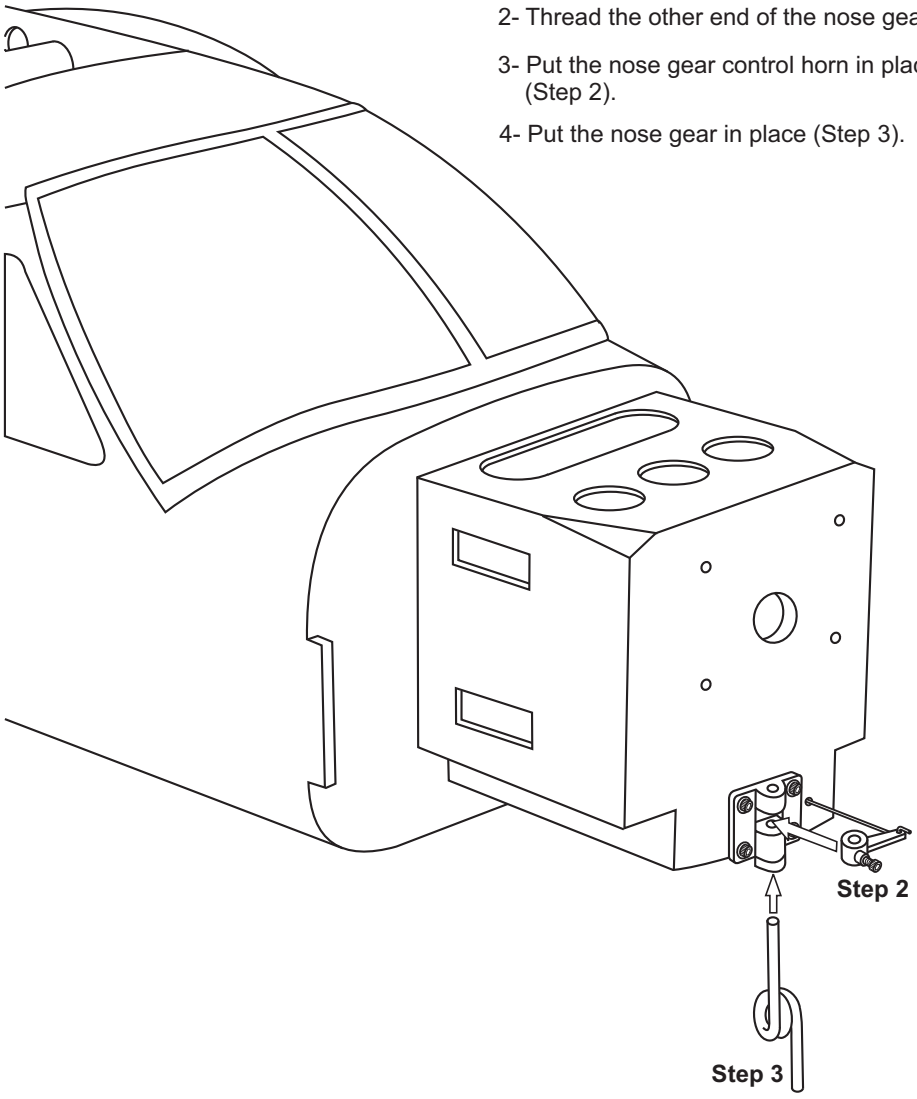

Step 1

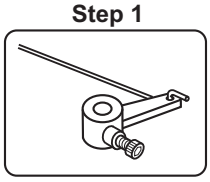

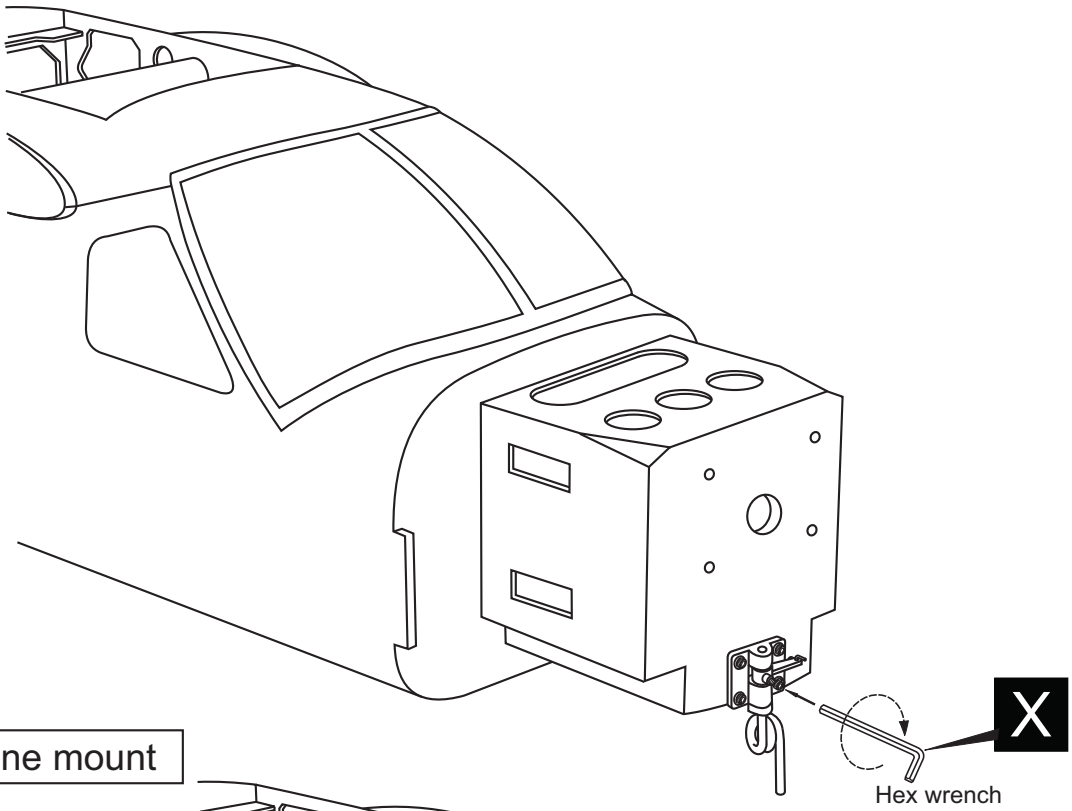

4-Installing the engine mount

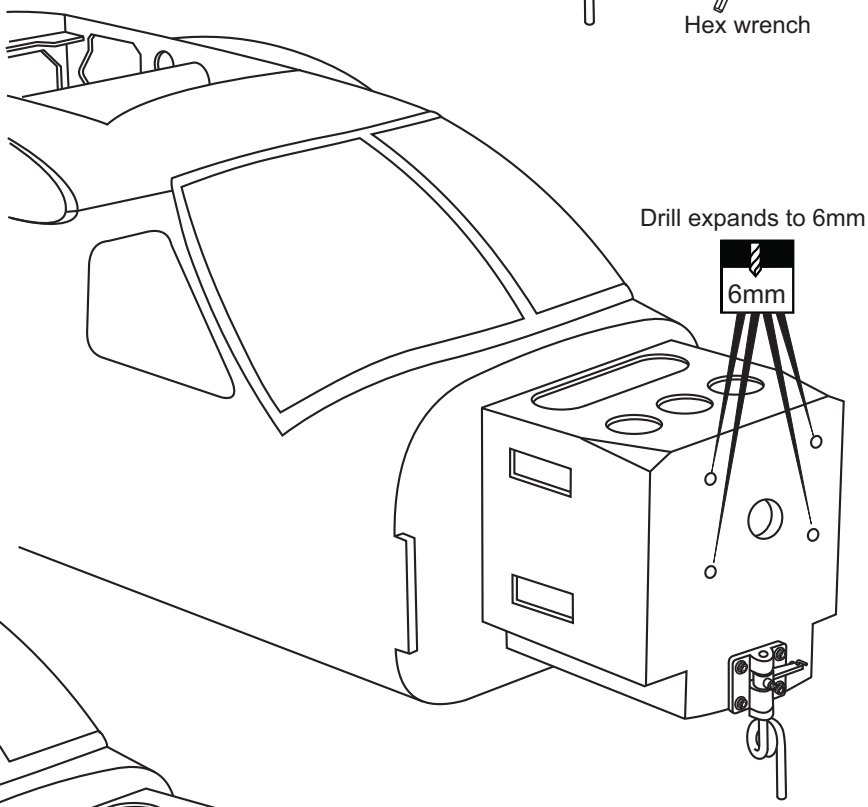

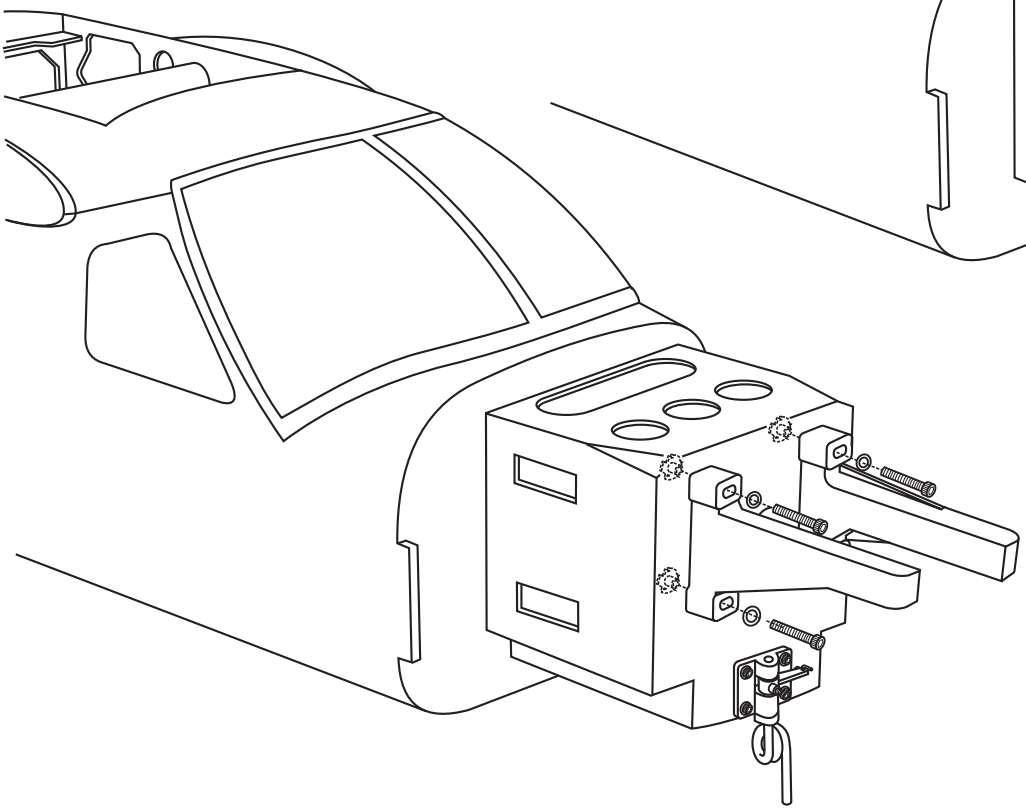

Attach the engine mount to the fire-wall using four of the 4x25mm hexagonal bolt, washer and blind nut.

4x25mm hexagonal bolt 4

Washer and blind nut 4

Position the engine to the engine mounts so the distance from the prop hub to the fire-wall is 139mm.
Mark the engine mounting plate where the four holes are to be drilled.

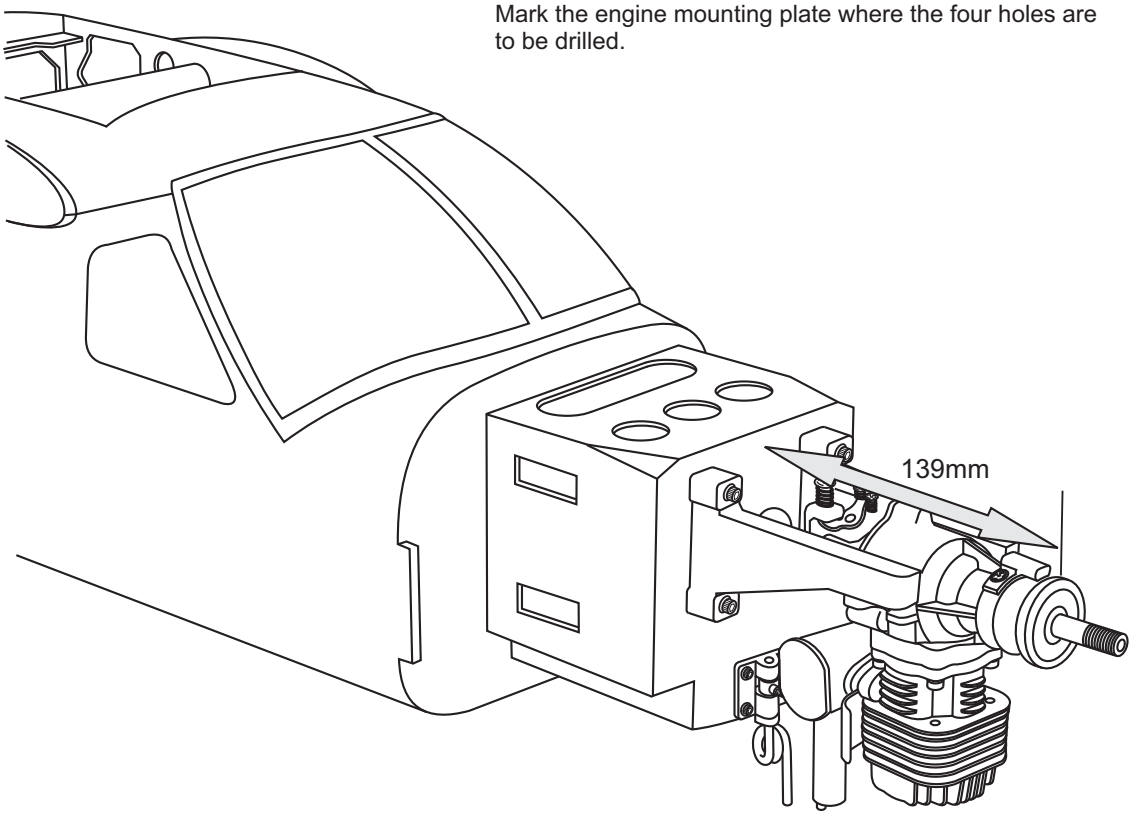

Remove the engine and drill a 4mm holes through the beam at each of the four marks made above.

Marking sure that you drill the holes perpendicular to the beam of the engine mount.

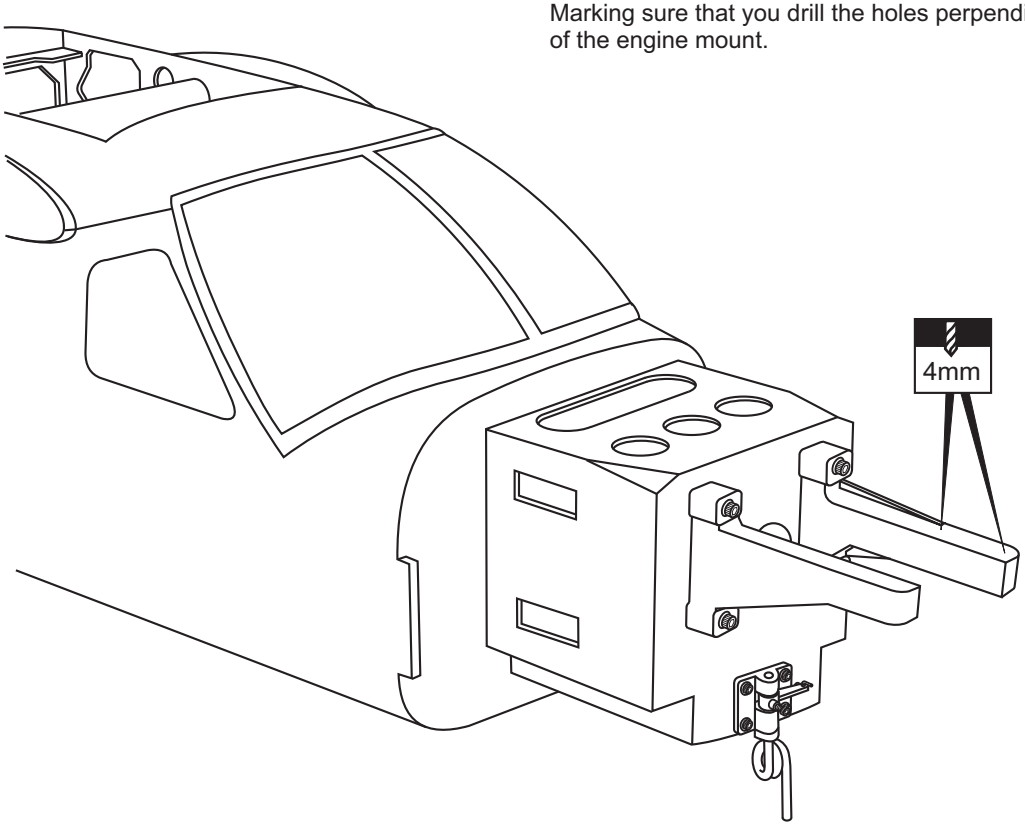

6-Installing the engine

Reposition the engine on the engine mount beams, aligning it with the holes. Secure the engine to the engine mount using four 4x25mm hexagonal bolt.

Note: Apply Silicon sealer to each of the 4x25mm hexagonal bolt and nut.

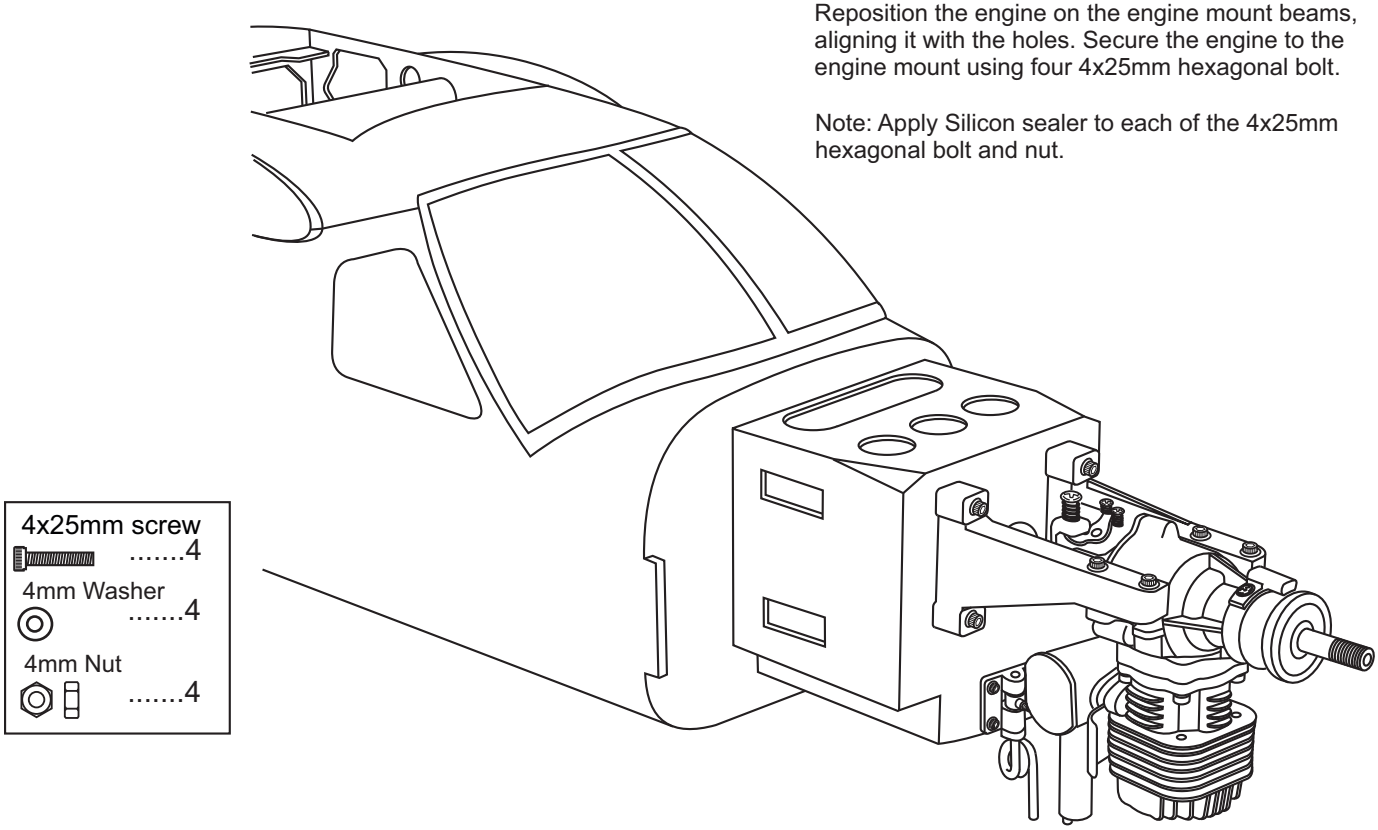

7-Installing the electric motor mounting

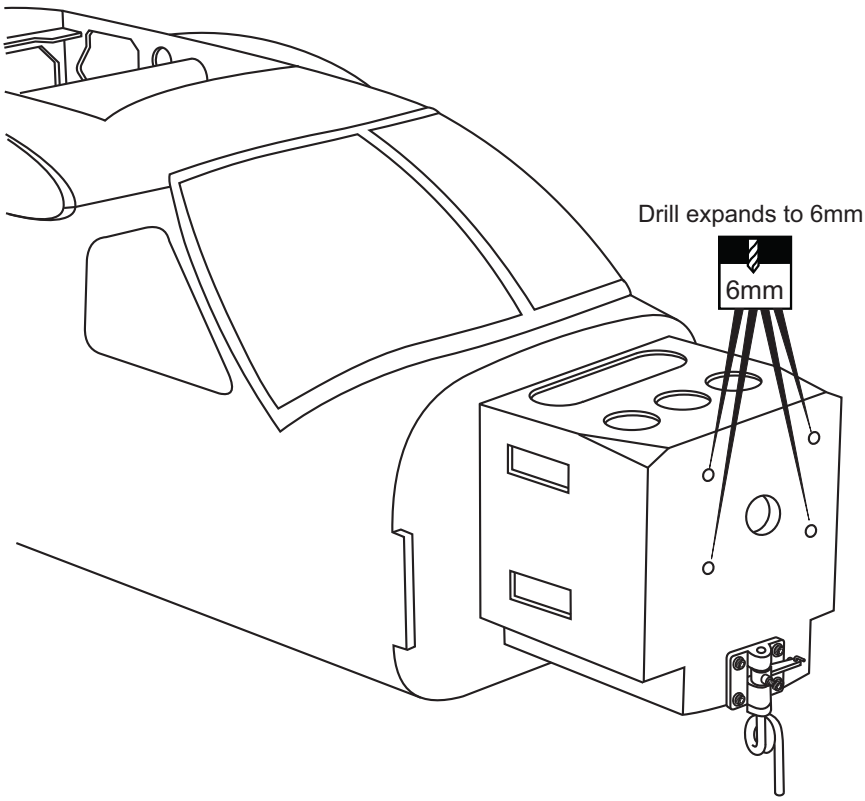

8-Installing the electric motor mounting

6x100mm bolt.....4

6mm nut.....12

6mm washer...16

Attach the four of the 6x100mm bolts washer and nuts to the fire-wall as shown.

Secure the Motor to the wooden motor mounting plate using the four of the 3x20mm hexagonal bolts, washer and nut.

3x20mm screw 4

3mm Washer 4

3mm Nut 4

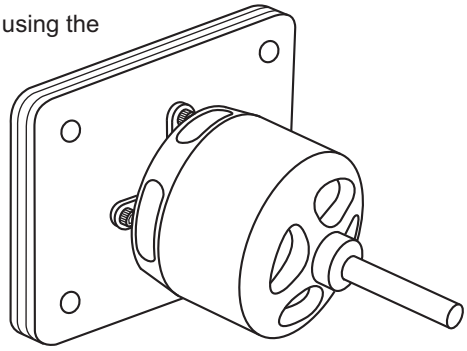

Adjust the wooden motor mount so the distance from the prop hub to the fire-wall is 143mm.

143mm

QUEST KODIAK 9-Installing the main landing gear

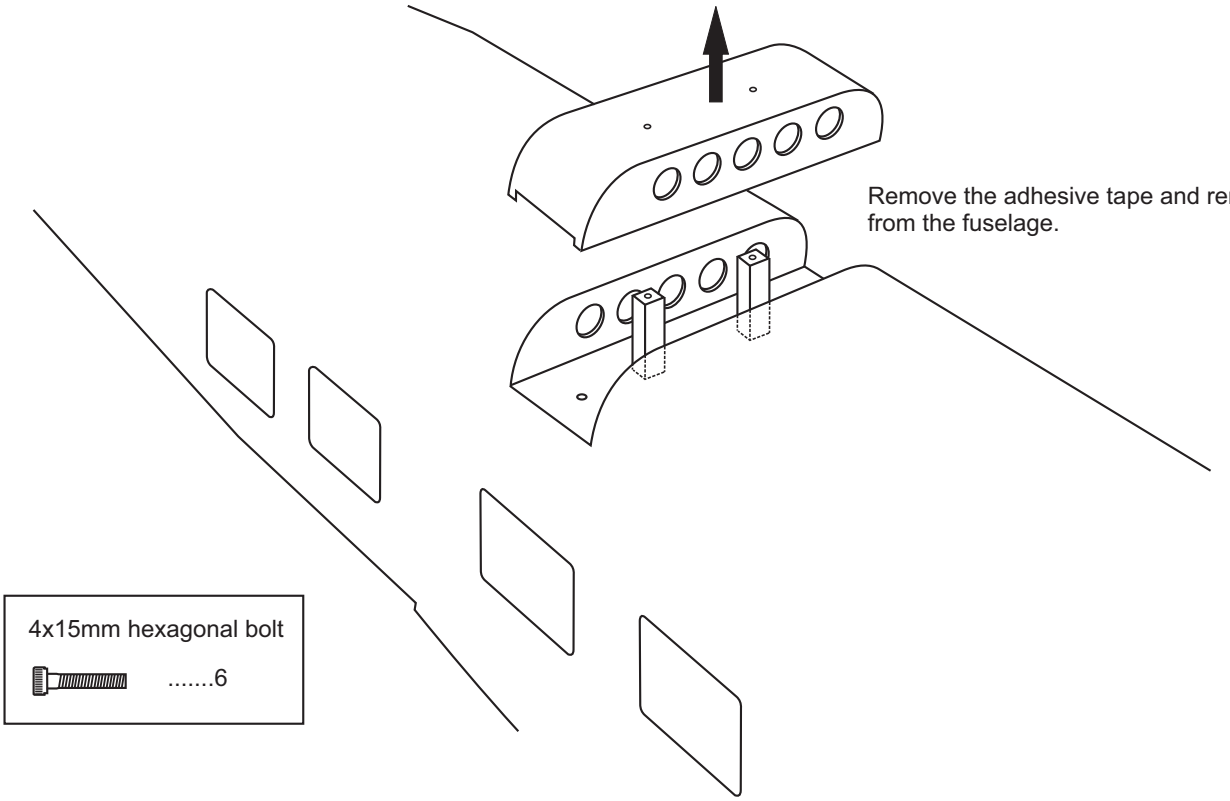

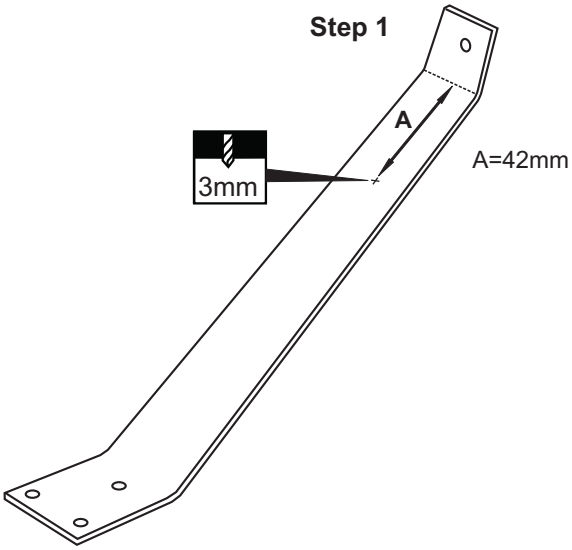

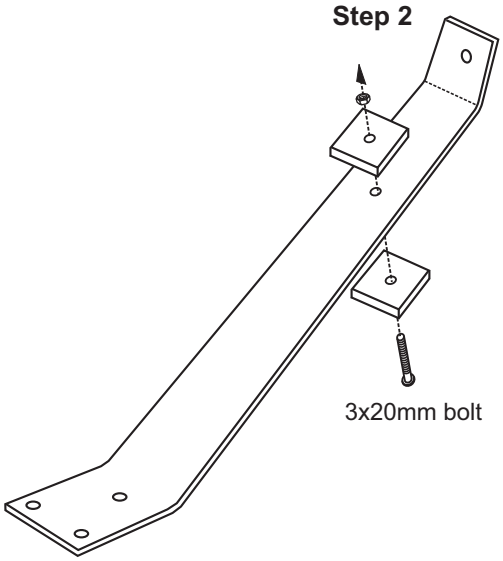

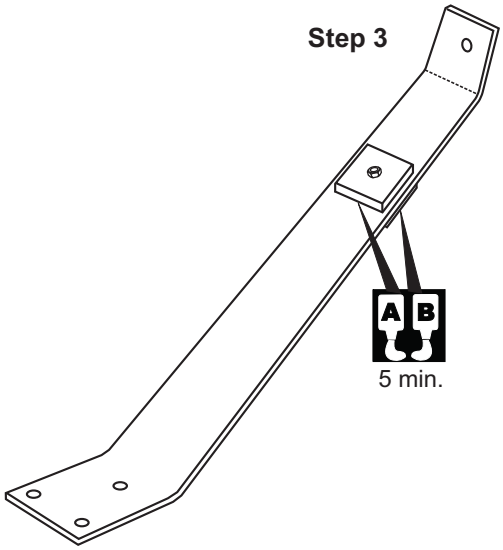

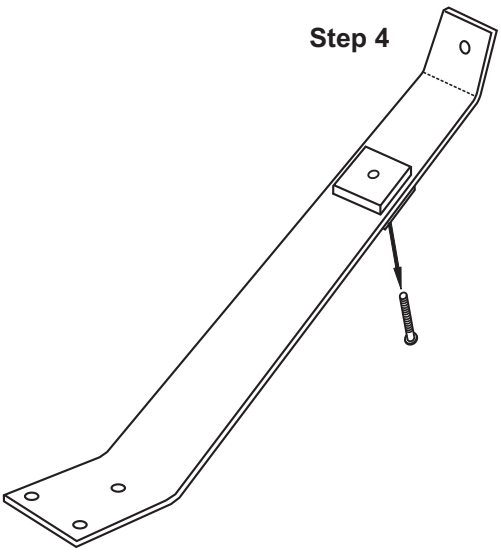

QUEST KODIAK 10-Installing the main landing gear

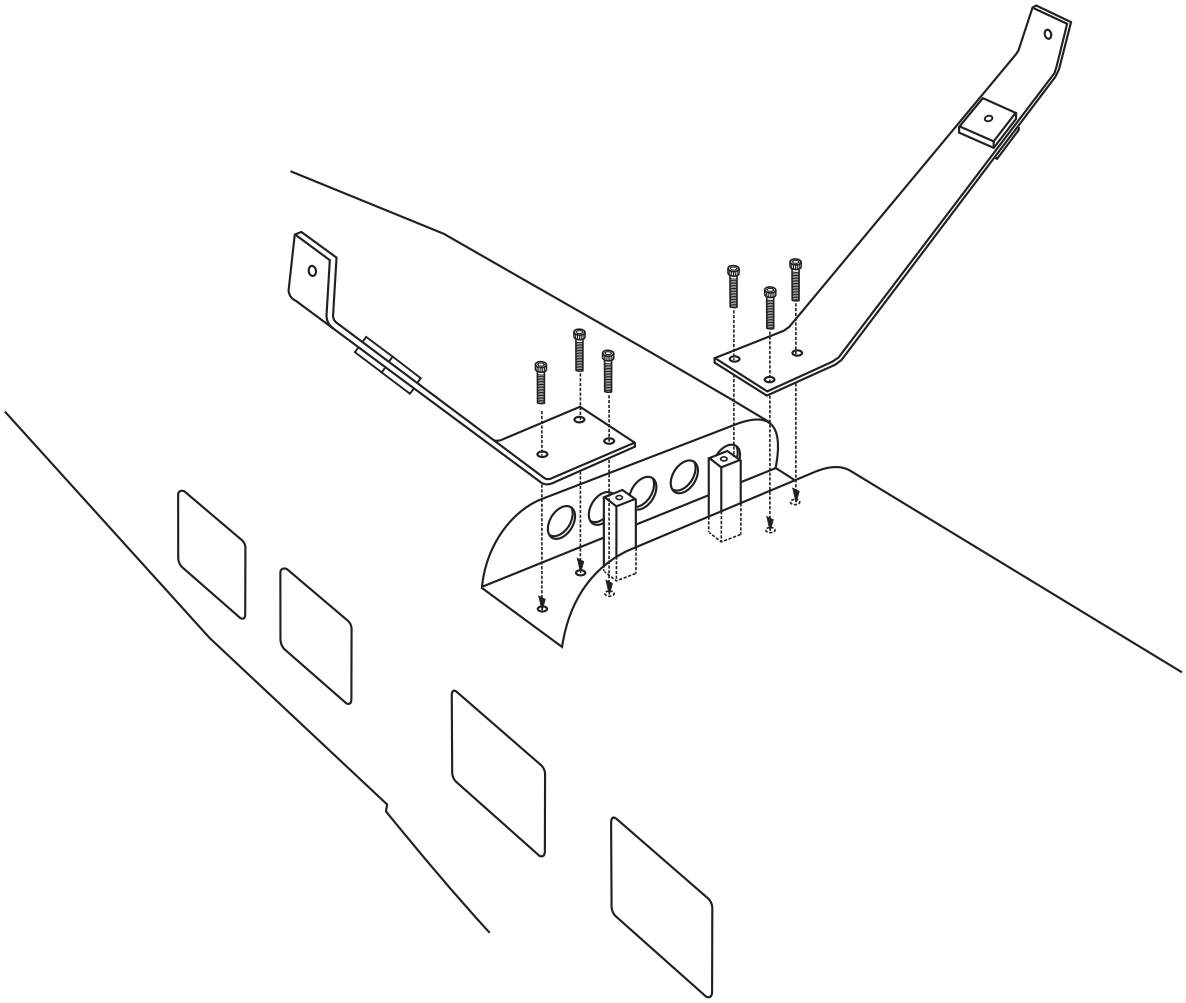

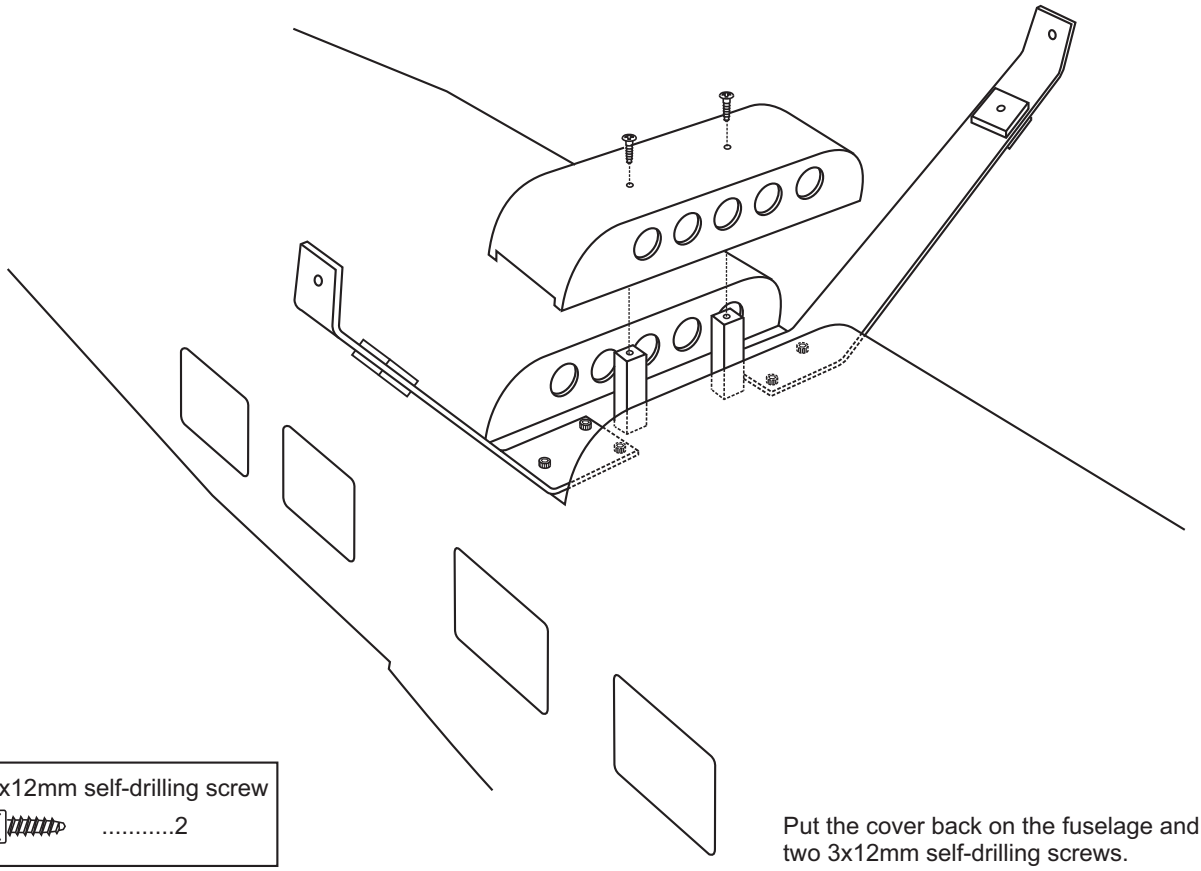

3x12mm self-drilling screw
.....2

Put the cover back on the fuselage and secure it with two 3x12mm self-drilling screws.

11-Installing the main landing gear

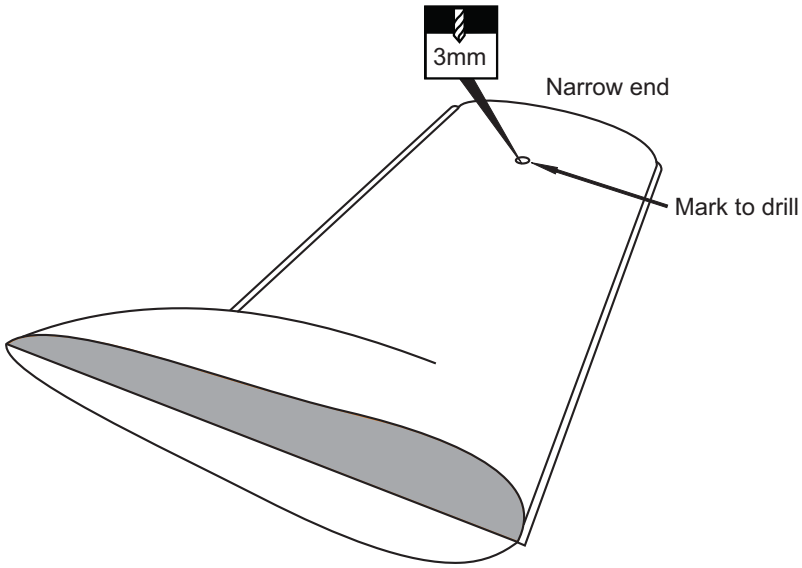

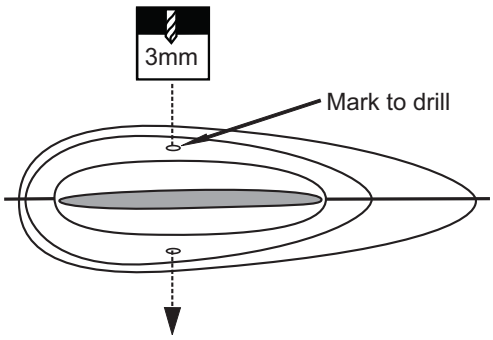

Plastic landing gear cover, view from the narrow end.

When putting the plastic gear cover on the aluminum landing gear, you have to separate the two pieces of plastic gear cover a litter on the narrow end (Step 1), once it is in place, you will glue the separated part with thin CA glue (Step 2).

Adjust the plastic cover until the holes on the plastic cover coincide with the holes on the aluminum landing gear, use 3x20mm bolt to fix the plastic cover as shown.

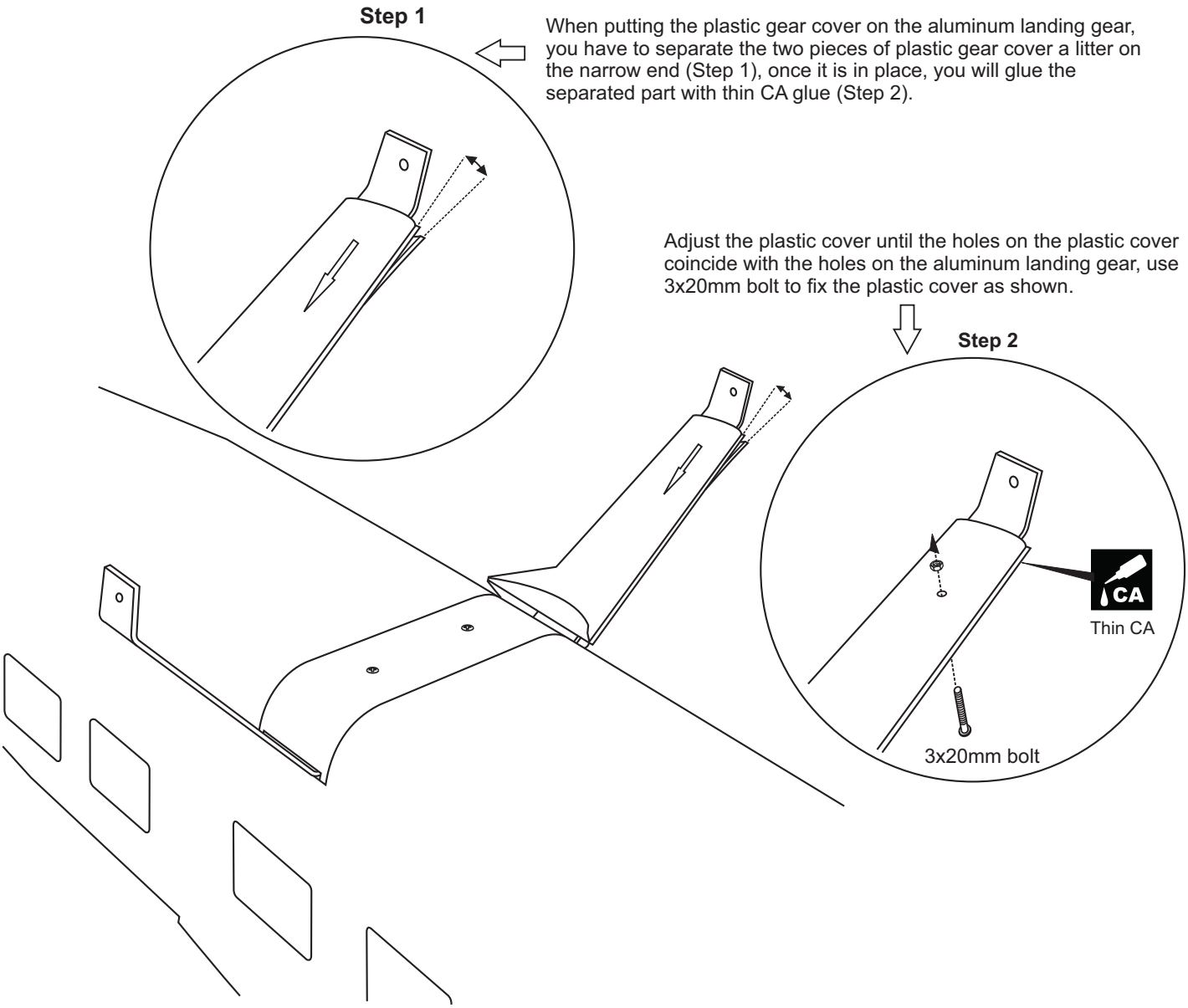

QUEST KODIAK 12-Installing the main landing gear

2x8mm self-drilling screw 12

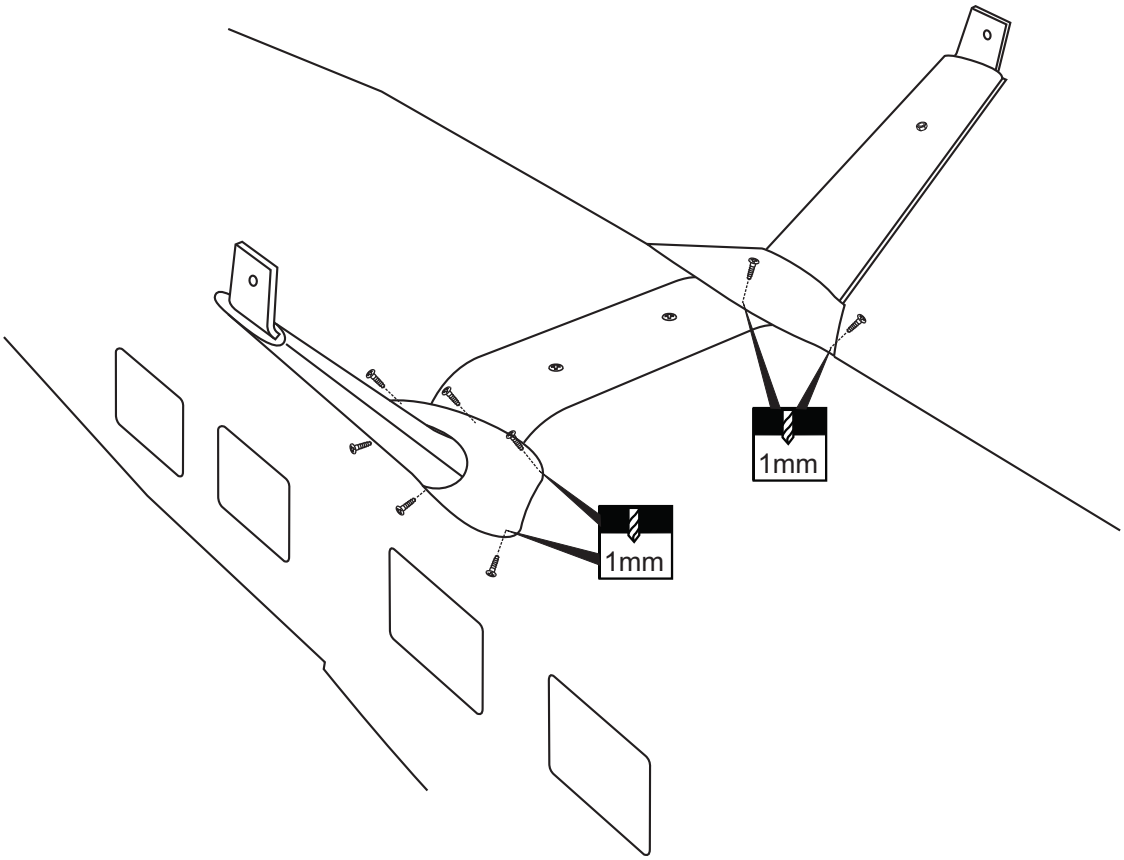

2x8mm self-drilling screw 12

75mm wheel ...2

4X45mm screw ...2

4mm nut 4

4mm washer 6

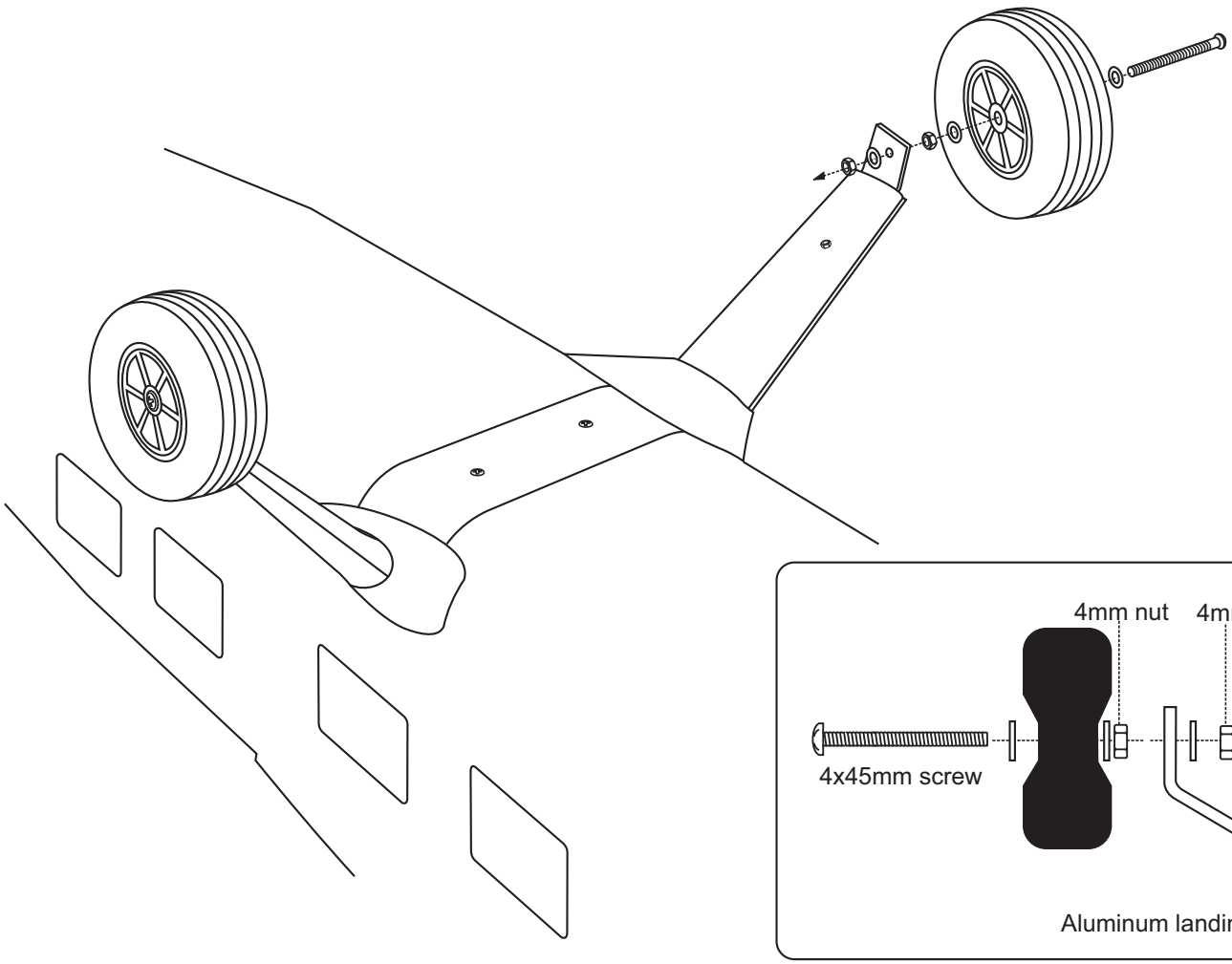

QUEST KODIAK 13-Installing the horizontal stabilizer

Step 1 Pull the left and right elevator out of the horizontal stabilizer (not glue yet).

Step 2

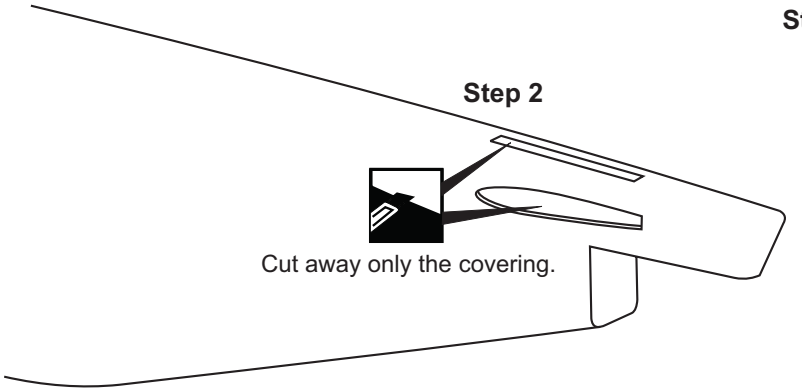

Cut away only the covering.

Using a sharp hobby knife, carefully cut away the covering around of all slots for the horizontal stabilizer and vertical fin installation.

Step 3

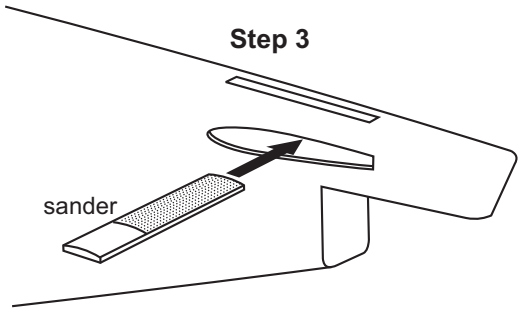

NOTE:
you may need to widen the slot a little more so that pushing the horizontal stabilizer into the fuselage is not too difficult.

Step 4

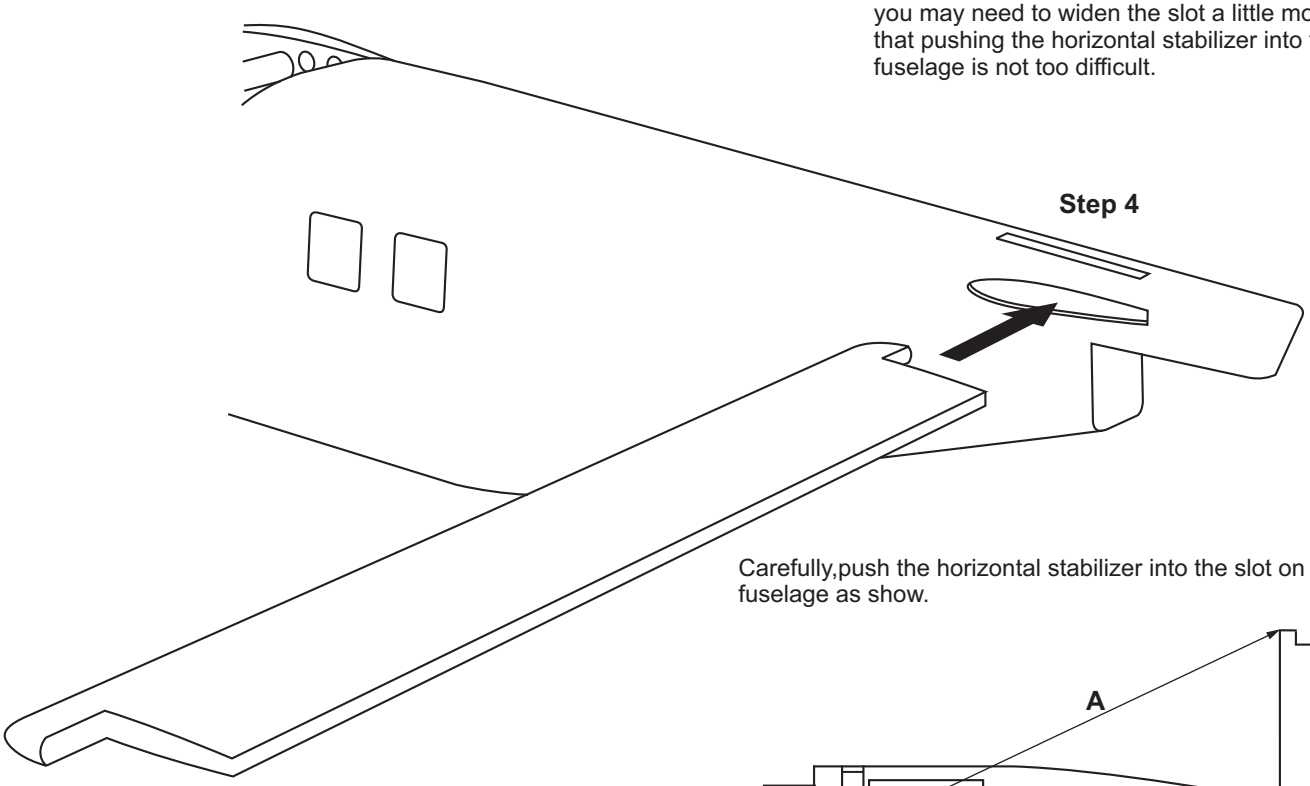

Carefully,push the horizontal stabilizer into the slot on the fuselage as show.

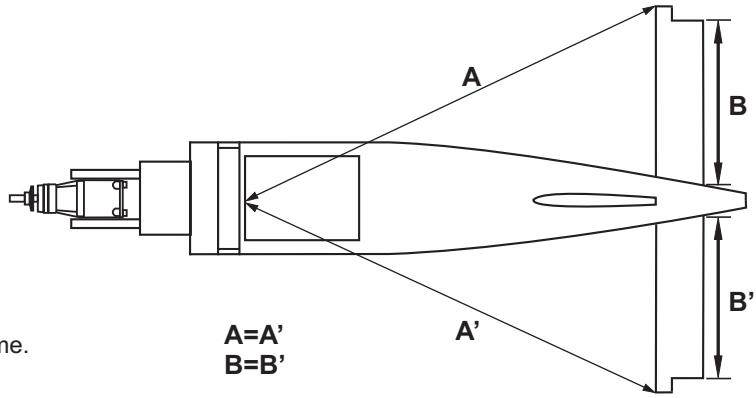

A=A'
B=B'

Check the alignment of the horizontal stabilizer by measuring from a fixed point along the center line of the fuselage to the leading edge on each side of the horizontal stabilizer.
The distance must be equal on both sides .
If not, adjust the stabilizer until the measurements are the same.

Step 5

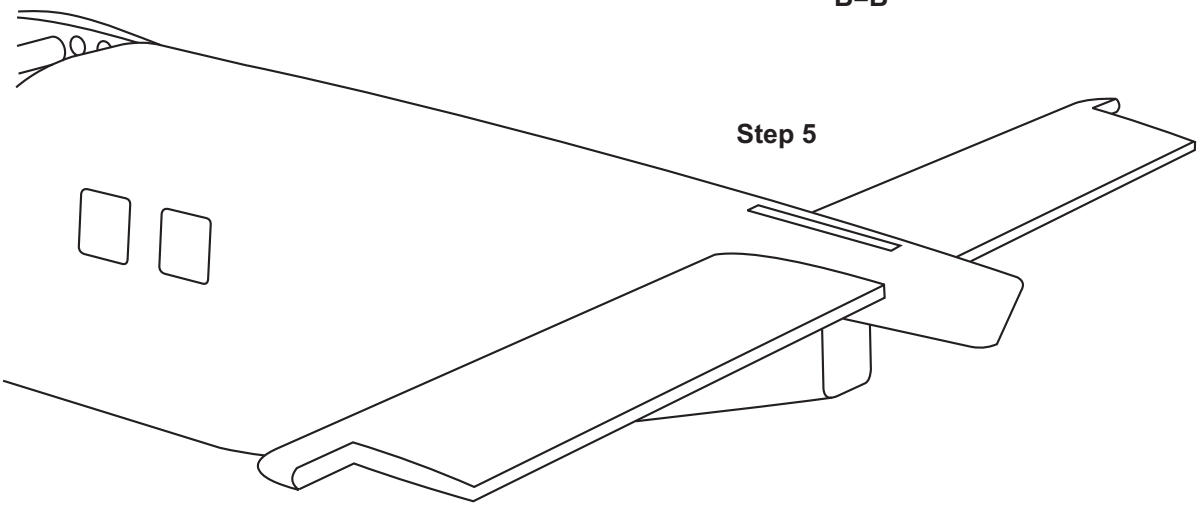

Step 6

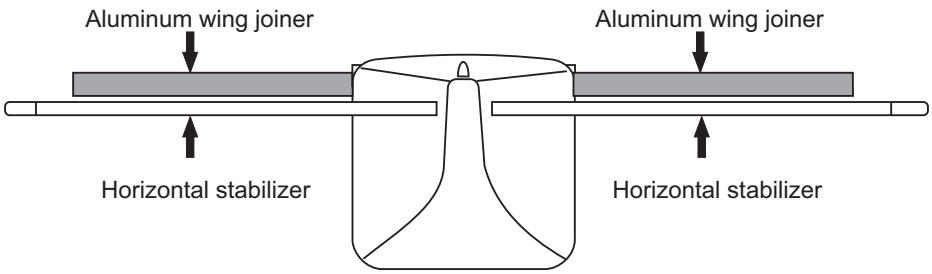

When viewing visually from the back of the fuselage, the aluminum wing joiner should be parallel to the horizontal stabilizer.

When you are satisfied with the alignment, use a pencil to trace around the top and bottom of the stabilizer where it meets the fuselage.

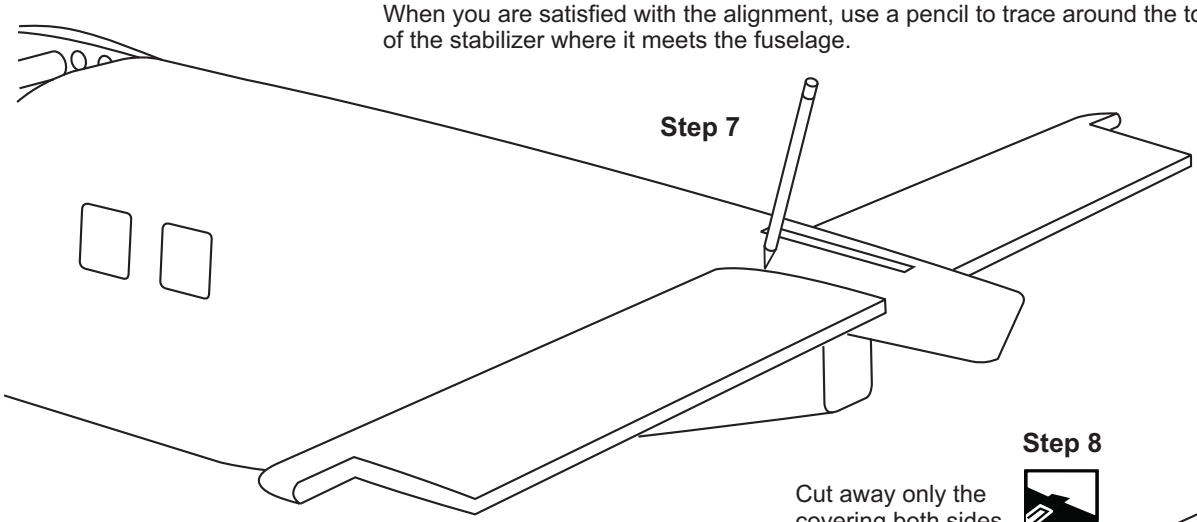

Step 8

Cut away only the covering both sides.

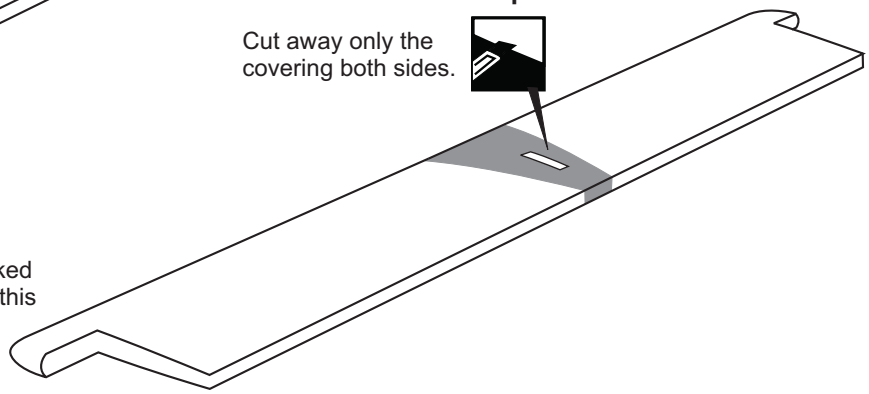

Remove the horizontal stabilizer from the fuselage. Using a straight edge and a sharp hobby knife, carefully cut away the covering **inside the lines** which were marked above. Be cautious **not to cut into the wood**-this will weaken the structure**.**

Step 9

Apply thin CA glue into the slot where the fuselage meet the horizontal stabilizer.

Apply CA glue both sides. (thin CA)

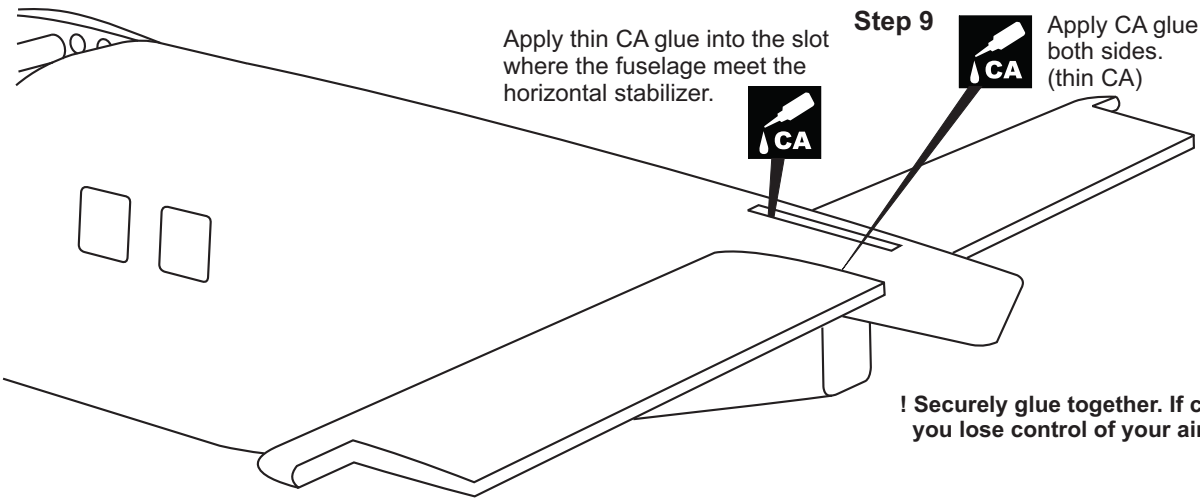

! Securely glue together. If coming off during fly, you lose control of your air plane.

Install the horizontal stabilizer onto the fuselage and adjust the alignment as described in step 5 and 6. Note: it is important to ensure that the horizontal stabilizer is also level in regards to the fuselage. Apply the thin CA along the area where the covering was removed in the previous step and to the fuselage where the horizontal stabilizer mounts .

QUEST KODIAK 15-Installing the horizontal stabilizer

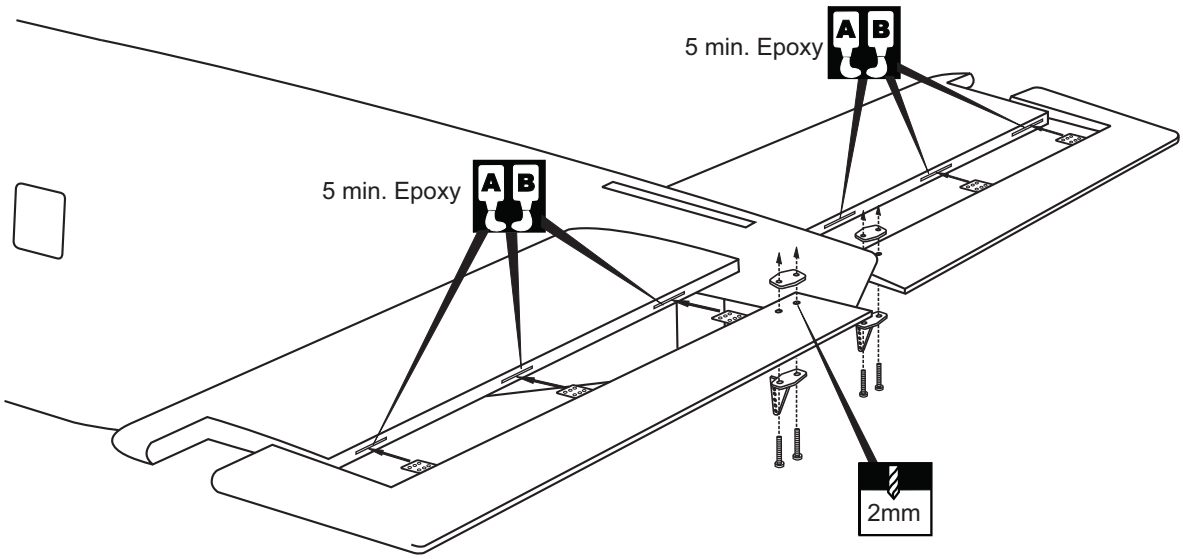

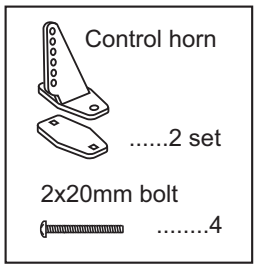

16-Installing the verticaltal stabilizer

Trial fit the vertical stabilizer in position. Ensure that the vertical stabilizer is perpendicular to the horizon stabilizer.

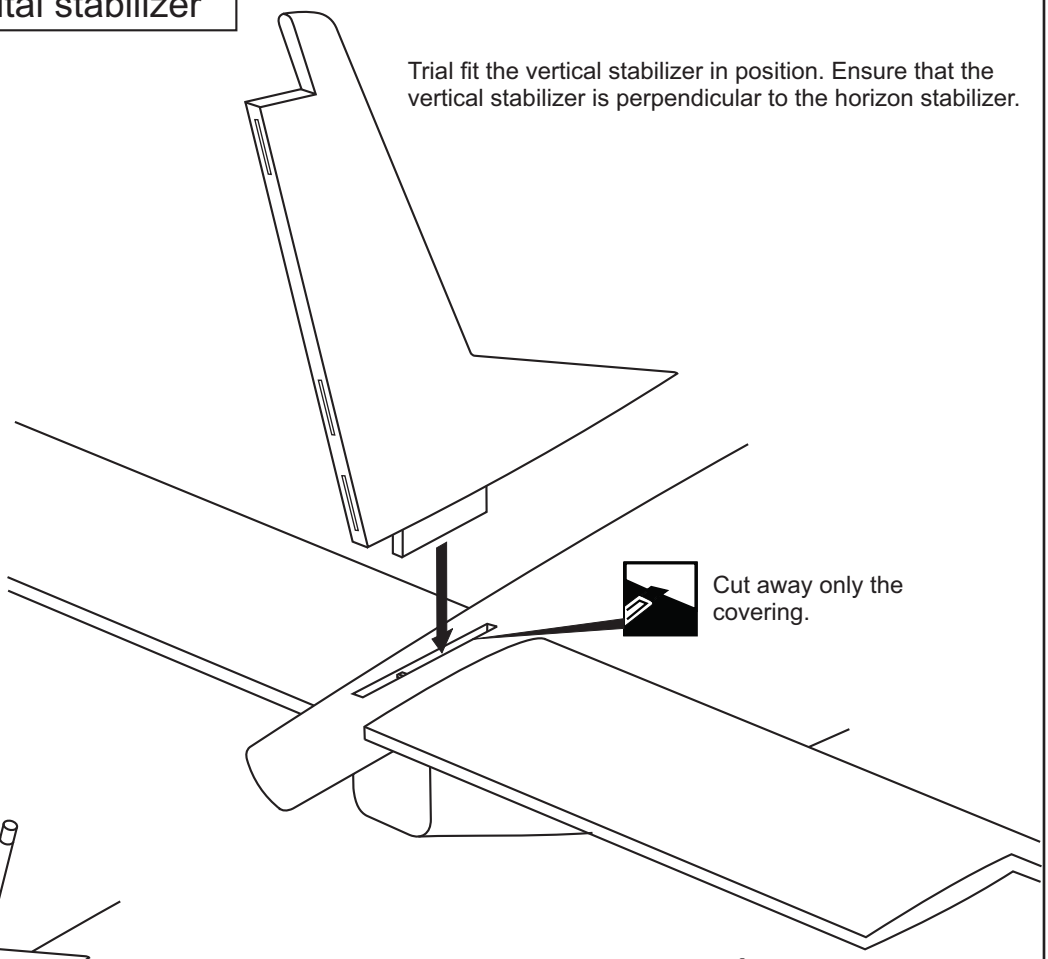

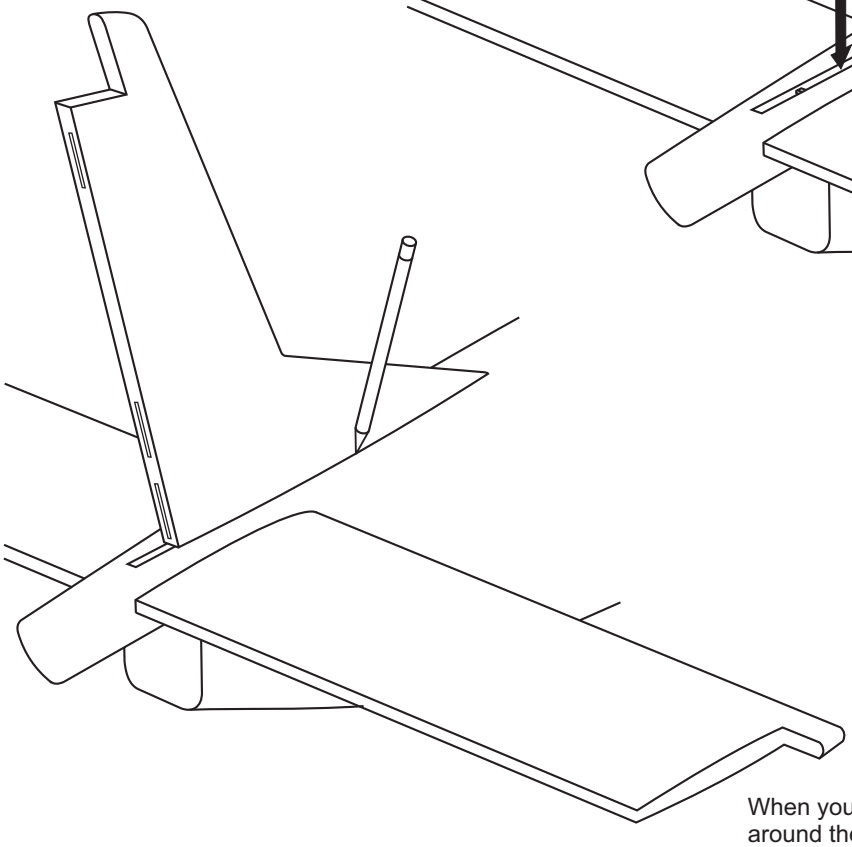

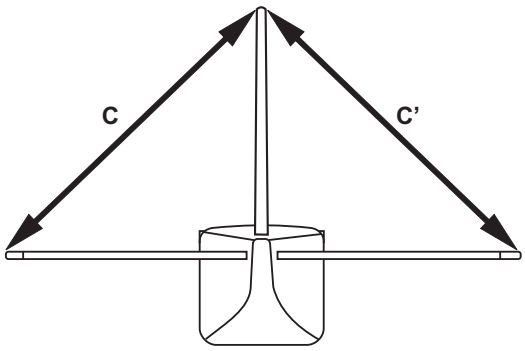

C=C'

When you are satisfied with the alignment, use a pencil to trace around the stabilizer where it meets the fuselage.

17-Installing the vertical stabilizer

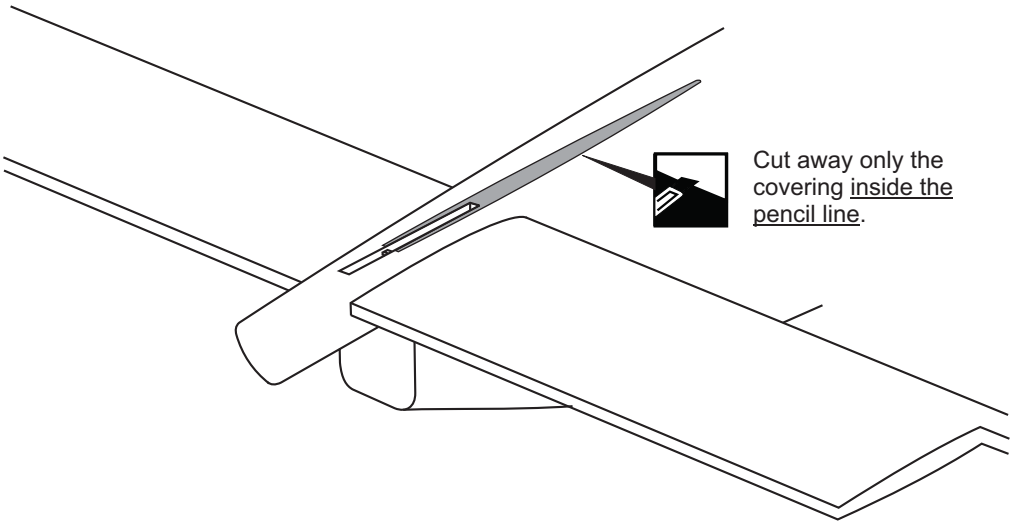

Glue the torque rod bearing into the slot in the vertical stabilizer, using a thin layer of 5 minute epoxy.

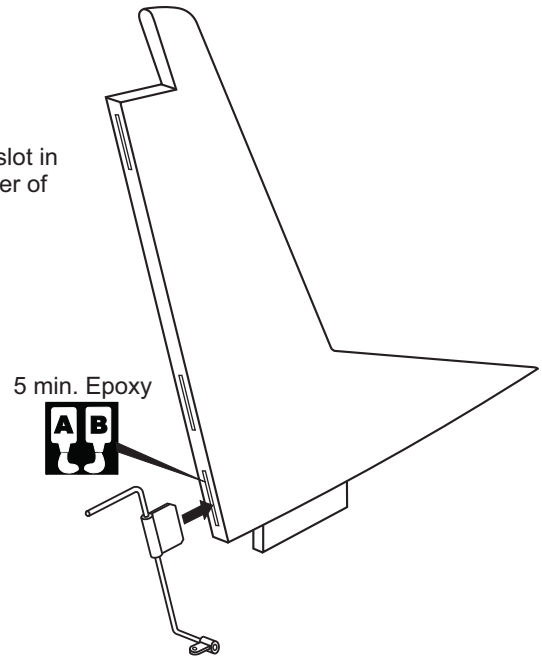

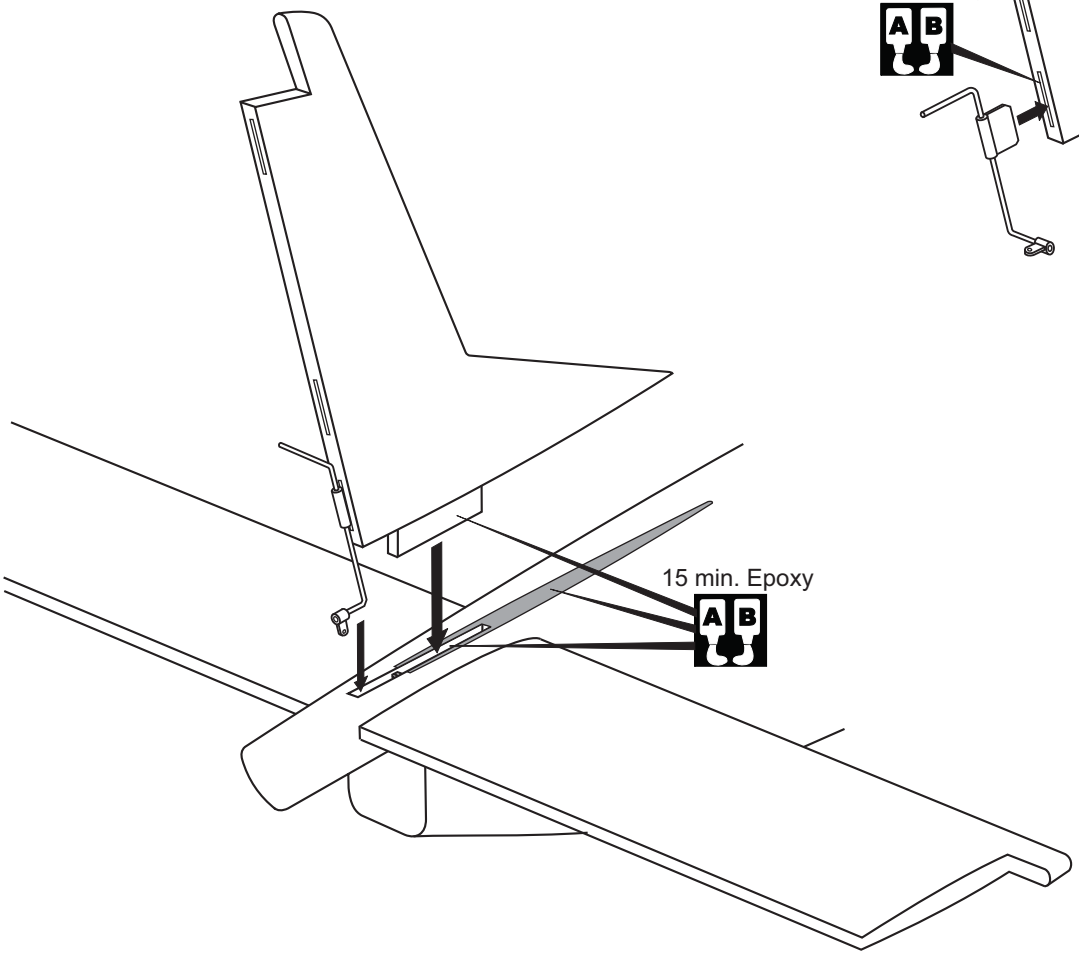

QUEST KODIAK 18-Installing the vertical stabilizer

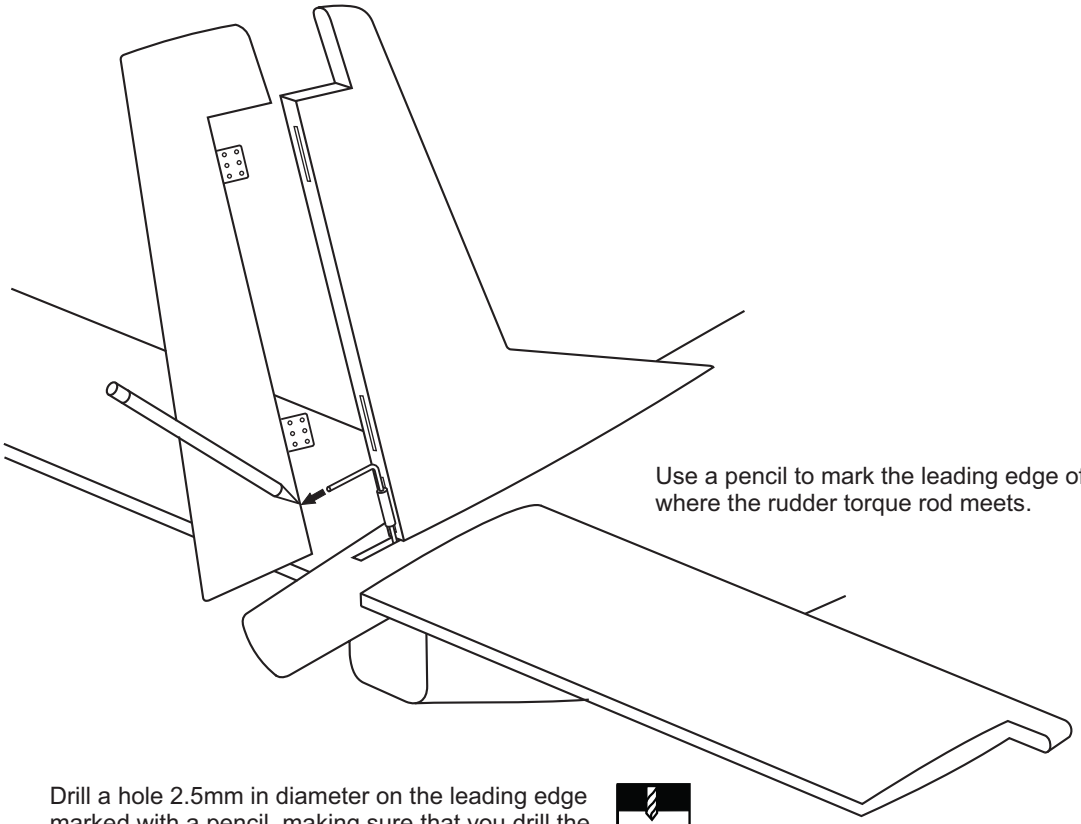

Use a pencil to mark the leading edge of the rudder where the rudder torque rod meets.

Drill a hole 2.5mm in diameter on the leading edge marked with a pencil, making sure that you drill the hole perpendicular to the leading edge of the rudder.

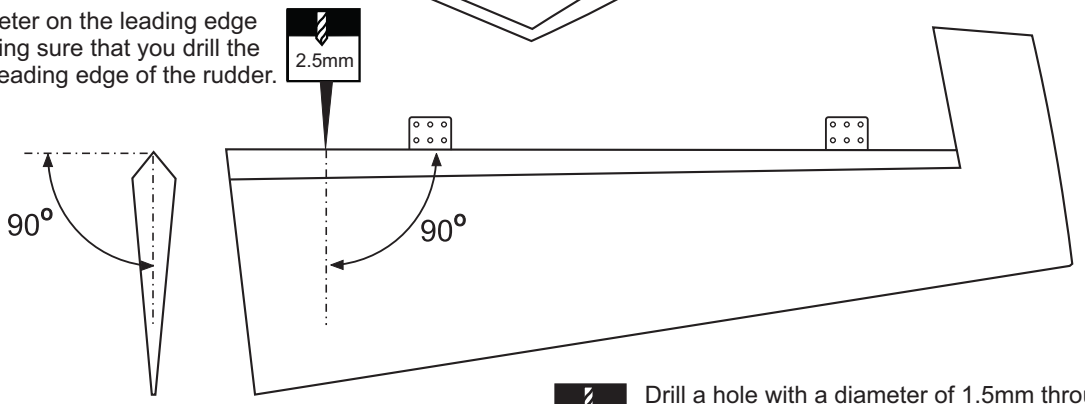

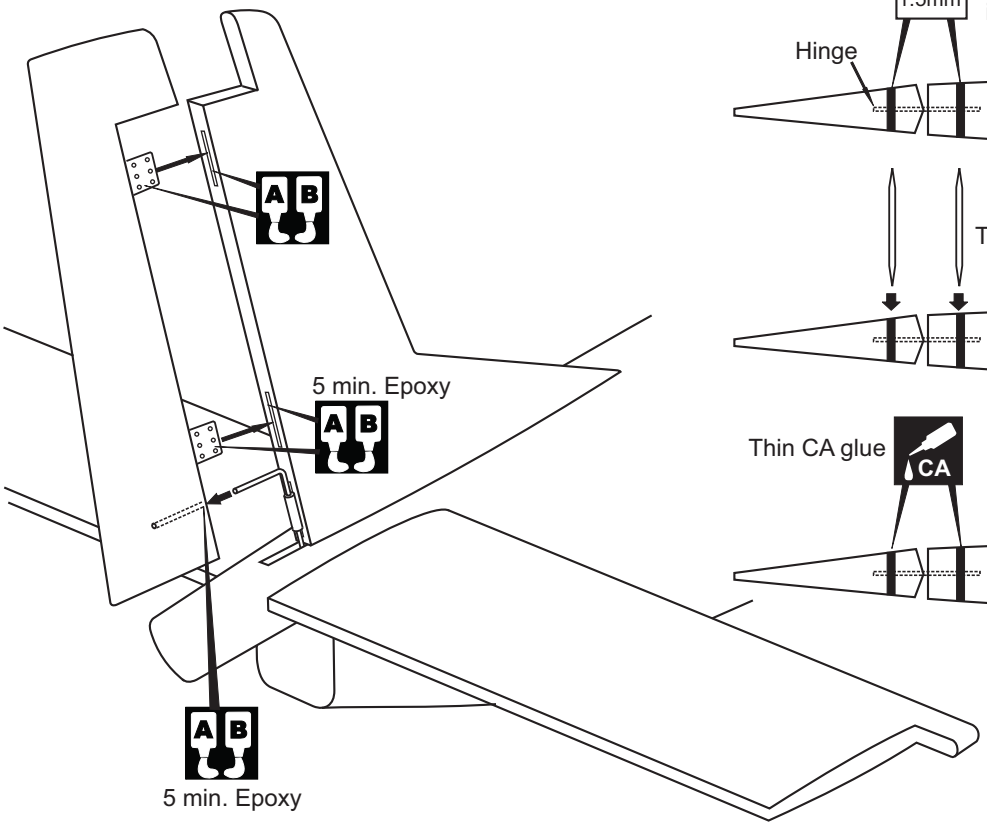

Drill a hole with a diameter of 1.5mm through the vertical stabilizer and rudder as shown in the figure.

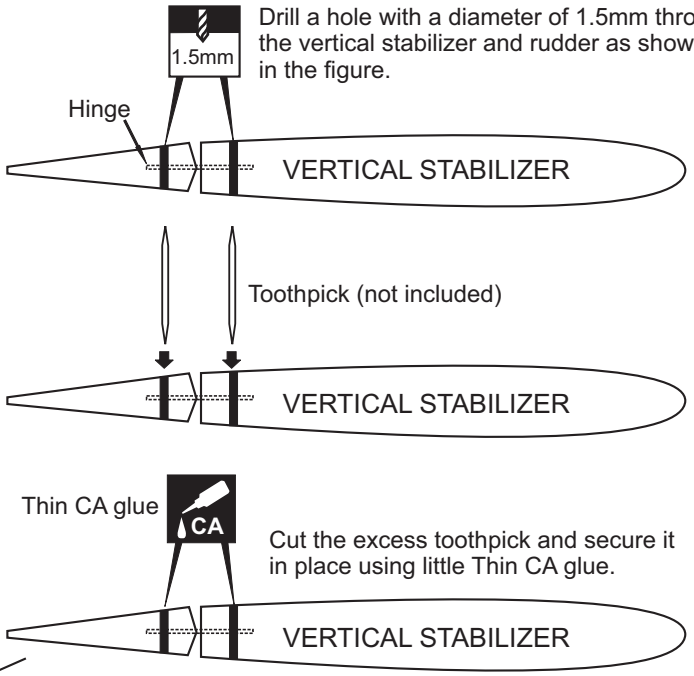

Cut the excess toothpick and secure it in place using little Thin CA glue.

VERY IMPORTANT

If you not make this step, the rudder or elevator may be comming off when your airplane flying with high speed. You will lose control of your airplane.

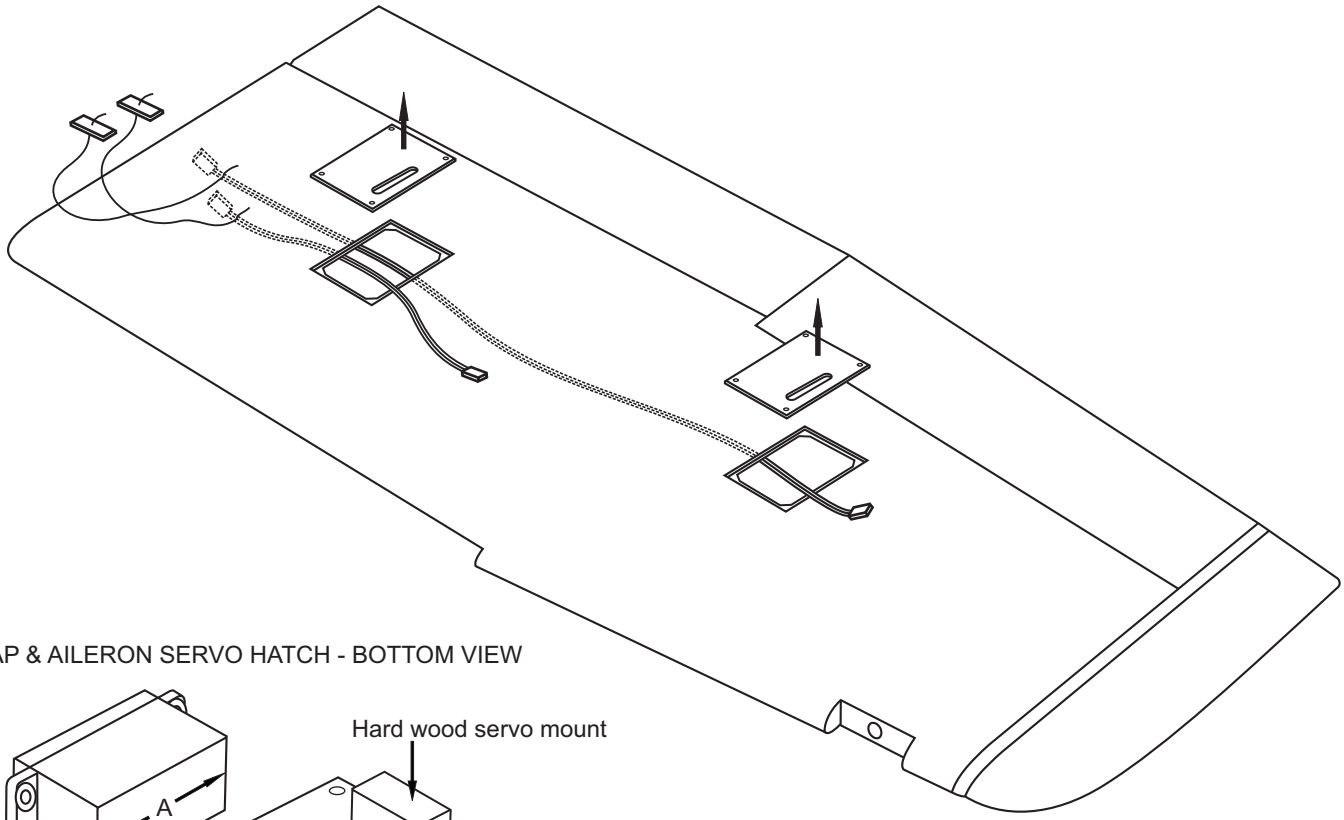

FLAP & AILERON SERVO HATCH - BOTTOM VIEW

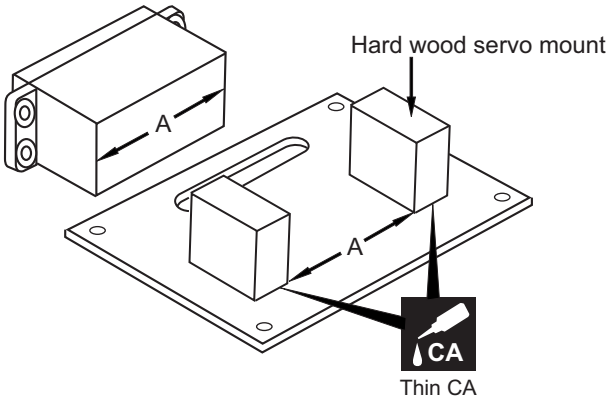

! Securely glue together. If coming off during fly, you lose control of your air plane.

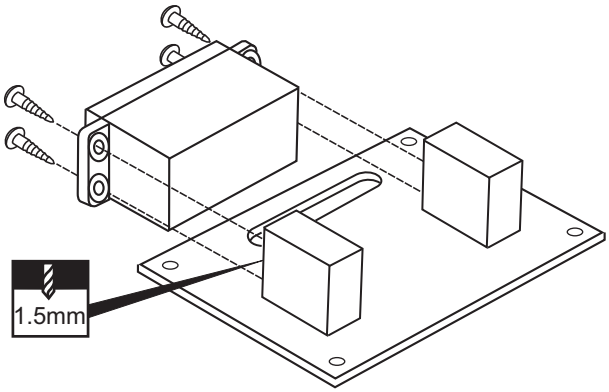

AILERON&FLAP SERVO HATCH - TOP VIEW

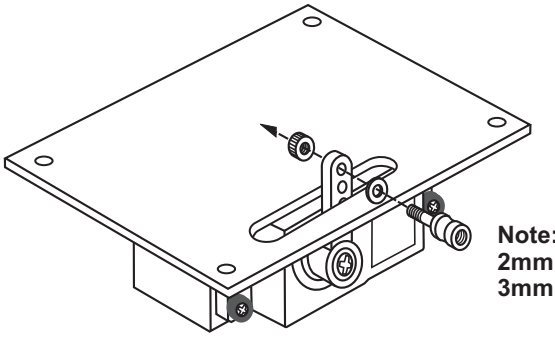

Note:
2mm connector for flap servo
3mm connector for aileron servo

! **IMPORTANT:**
To be safe, you must attach the four screws as shown in this picture.

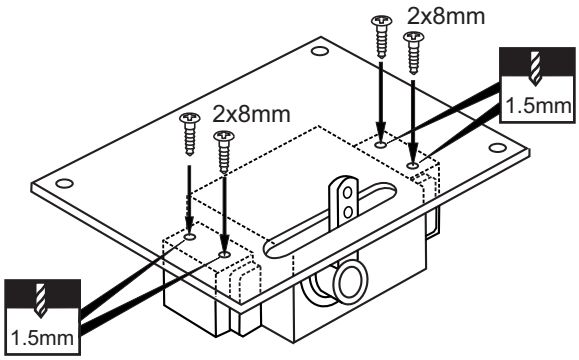

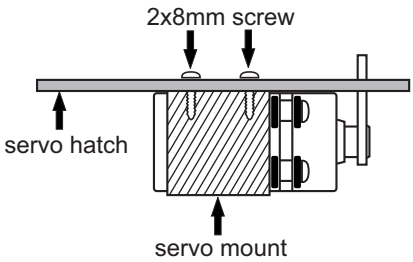

2mm connector 1

3mm connector 1

QUEST KODIAK 20- Flap & Aileron linkages

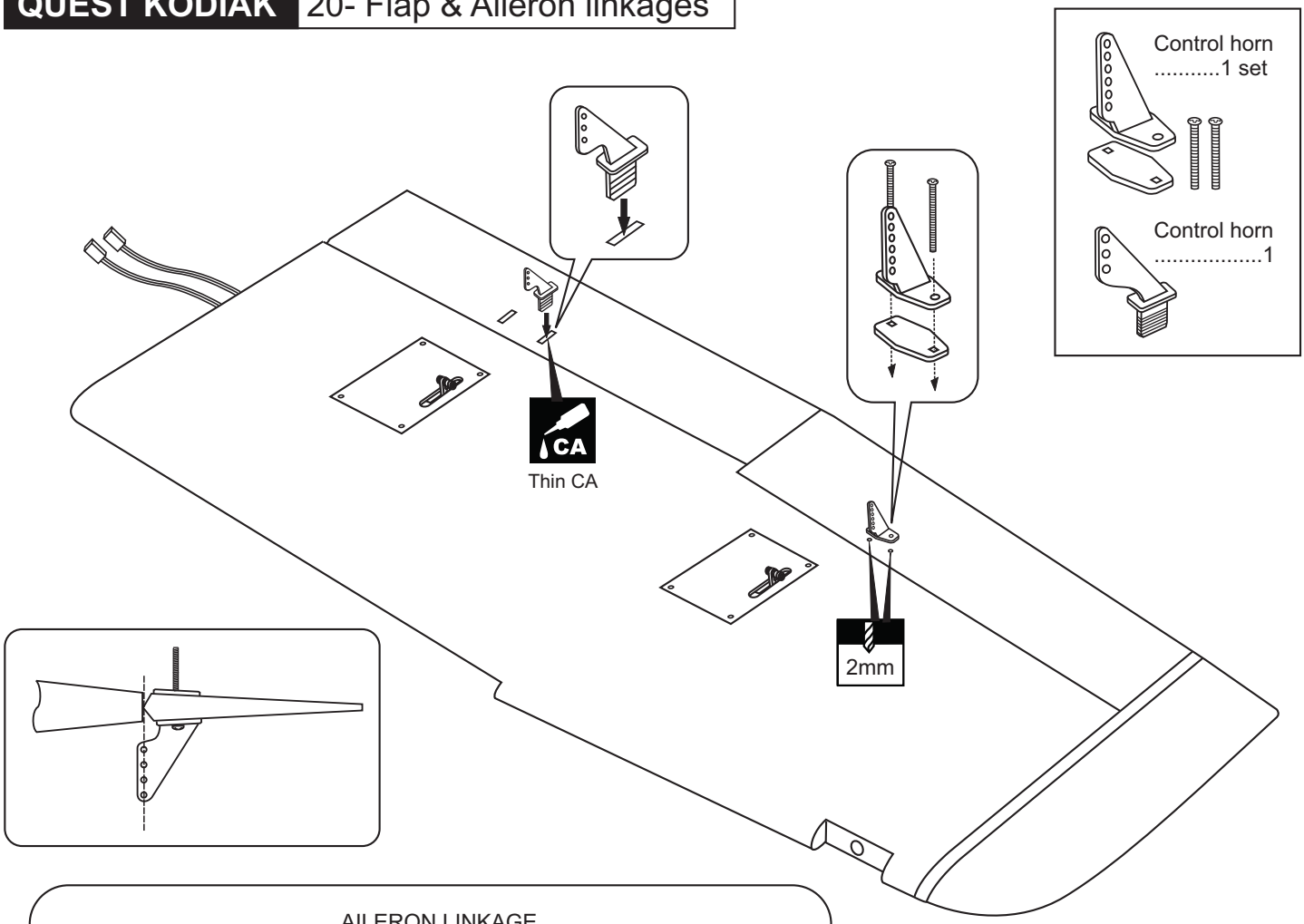

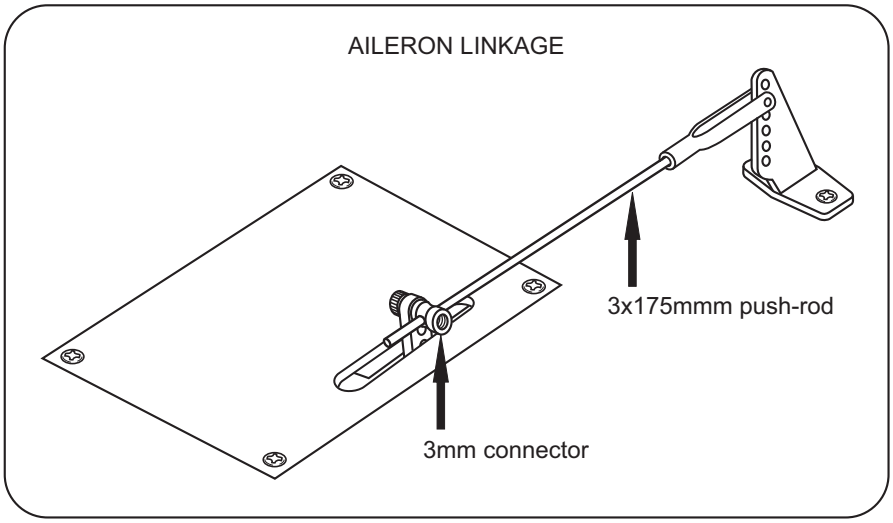

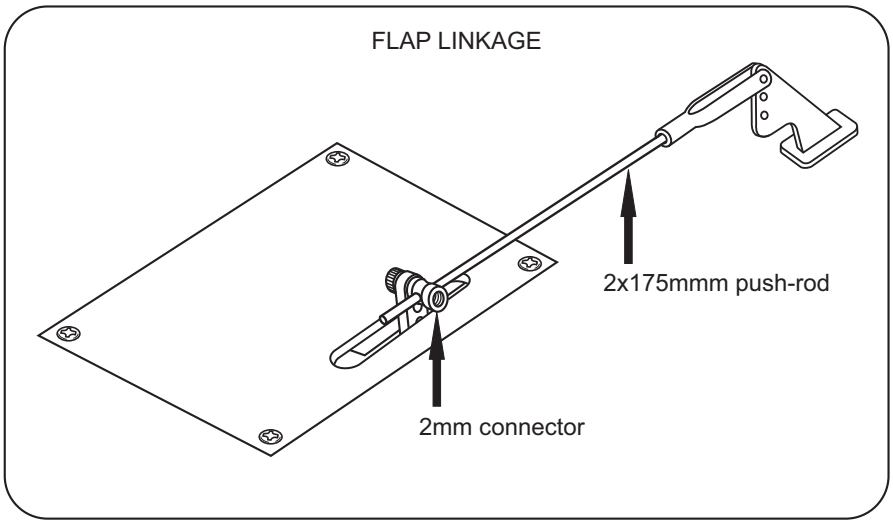

2x175mm rod with clevis one end .....1 set

3x175mm rod with clevis one end .....1 set

QUEST KODIAK 21- Flap & Aileron linkages

3x15mm self drilling screw 1

Do the same way with other wing half.

Aluminum wing brace.

The hole on the wing surface is already pre-drilled.

Aluminum wing brace.

Light

Step 1

X

Step 2

1mm

1.2x8mm self-drilling screw 6

22- Dowel installation

6x20mm wooden dowel 2

NOTE:
you may need to widen the hole a little more so that pushing the wooden dowel into the fuselage is not too difficult.

6x20mm wooden dowel

6x20mm wooden dowel

Thin CA

CA

NOTE:
The wooden dowels must be perpendicular with the root rib.

CA Thin CA

QUEST KODIAK 23- Elevator & Rudder servo

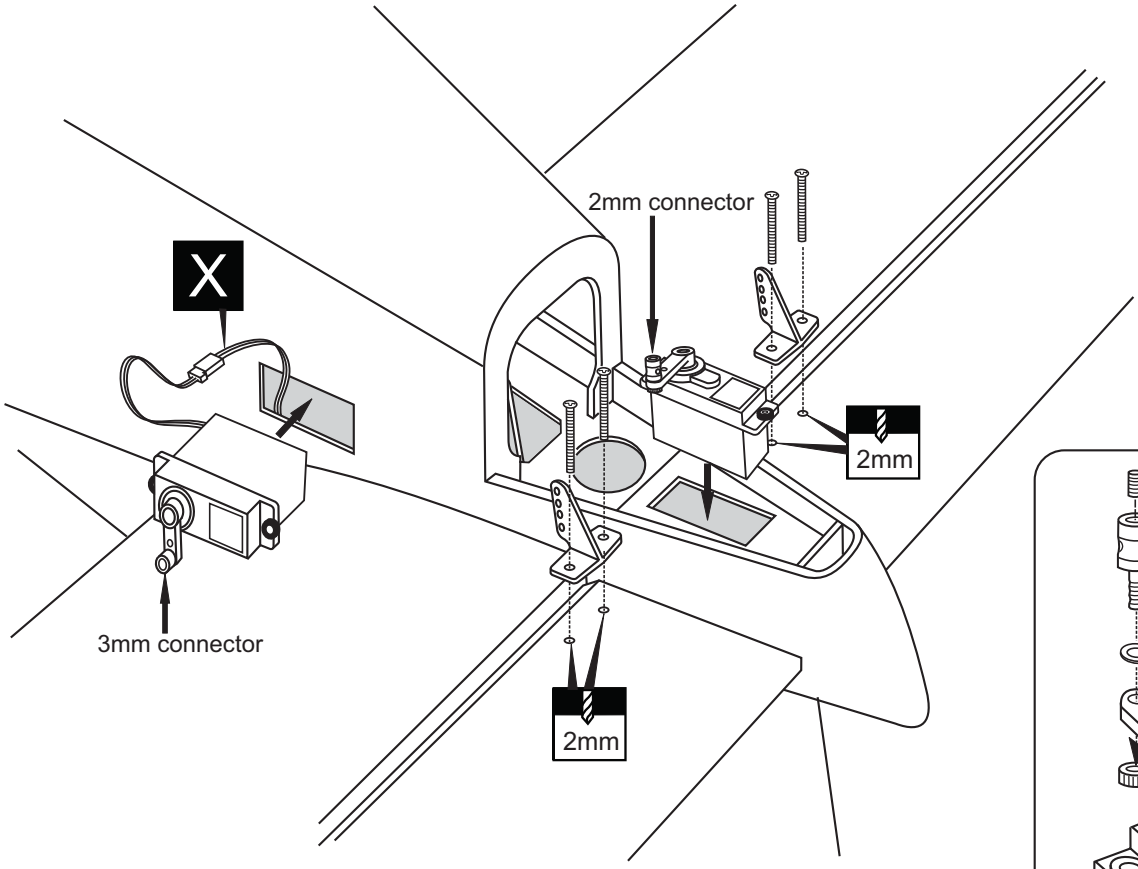

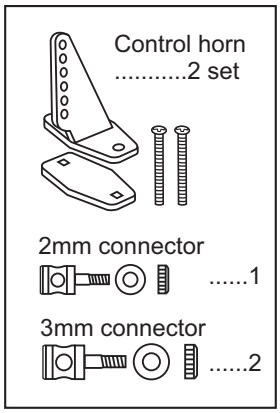

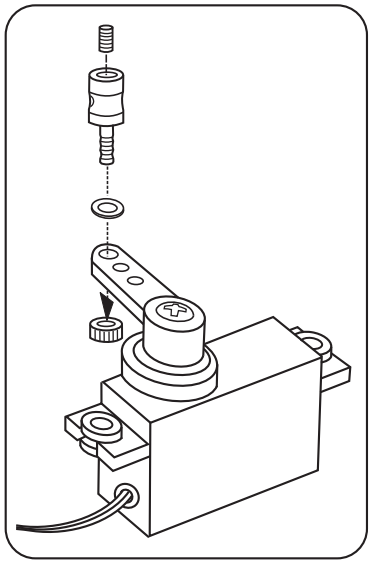

24- Elevator & Rudder linkages

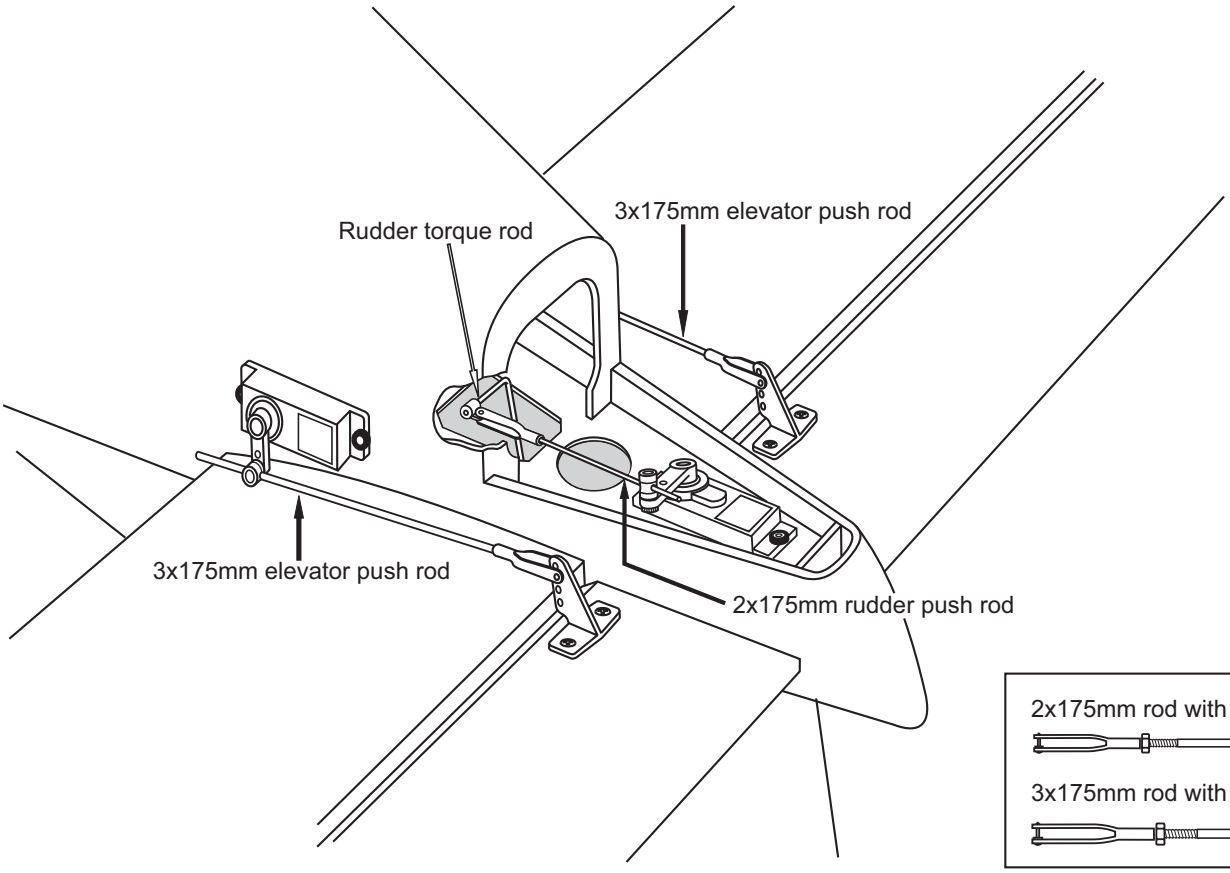

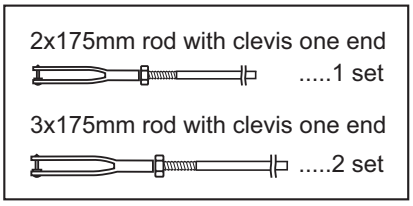

QUEST KODIAK 25- Plastic shield

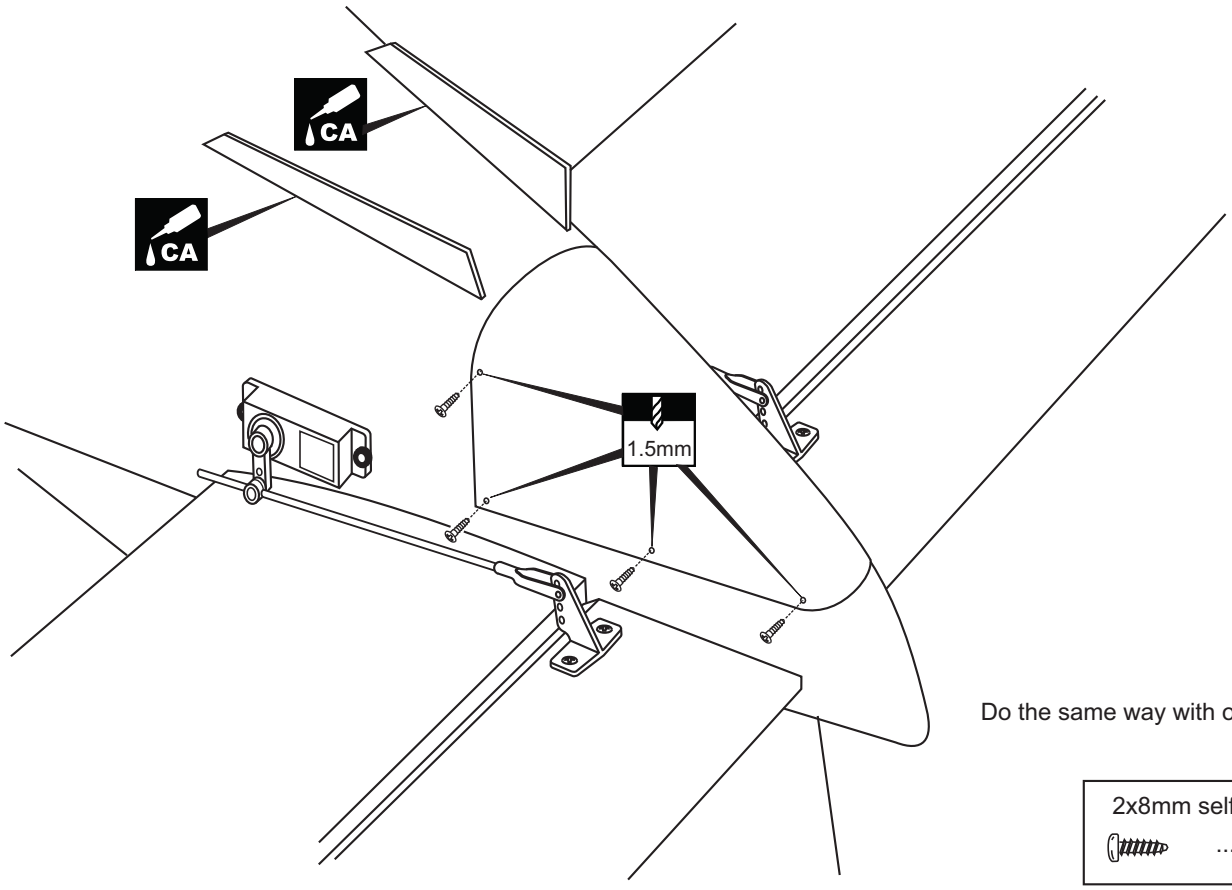

Do the same way with other side.

2x8mm self-drilling screw 8

26- Throttle & Nose gear serov

1.2x500mm nose gear push rod 1

2x500mm throttle rod with clevis one end 1

2mm connector 2

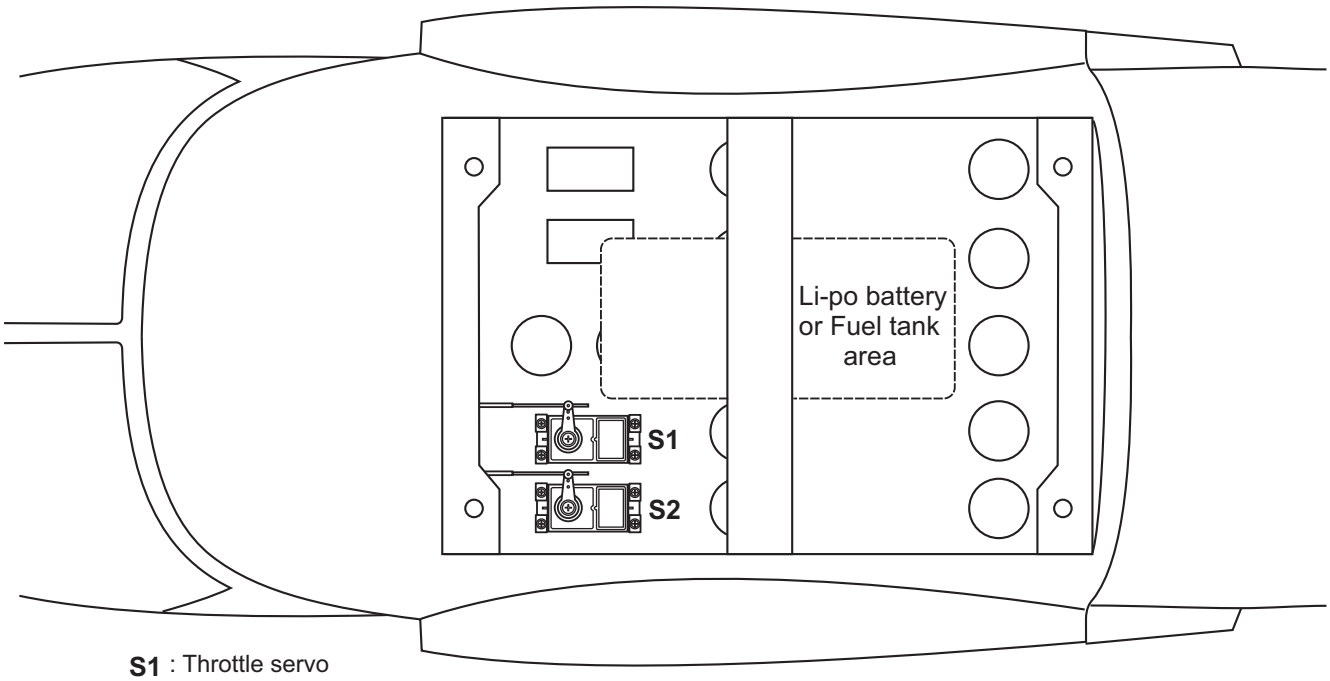

S1 : Throttle servo

S2 : Nose gear servo

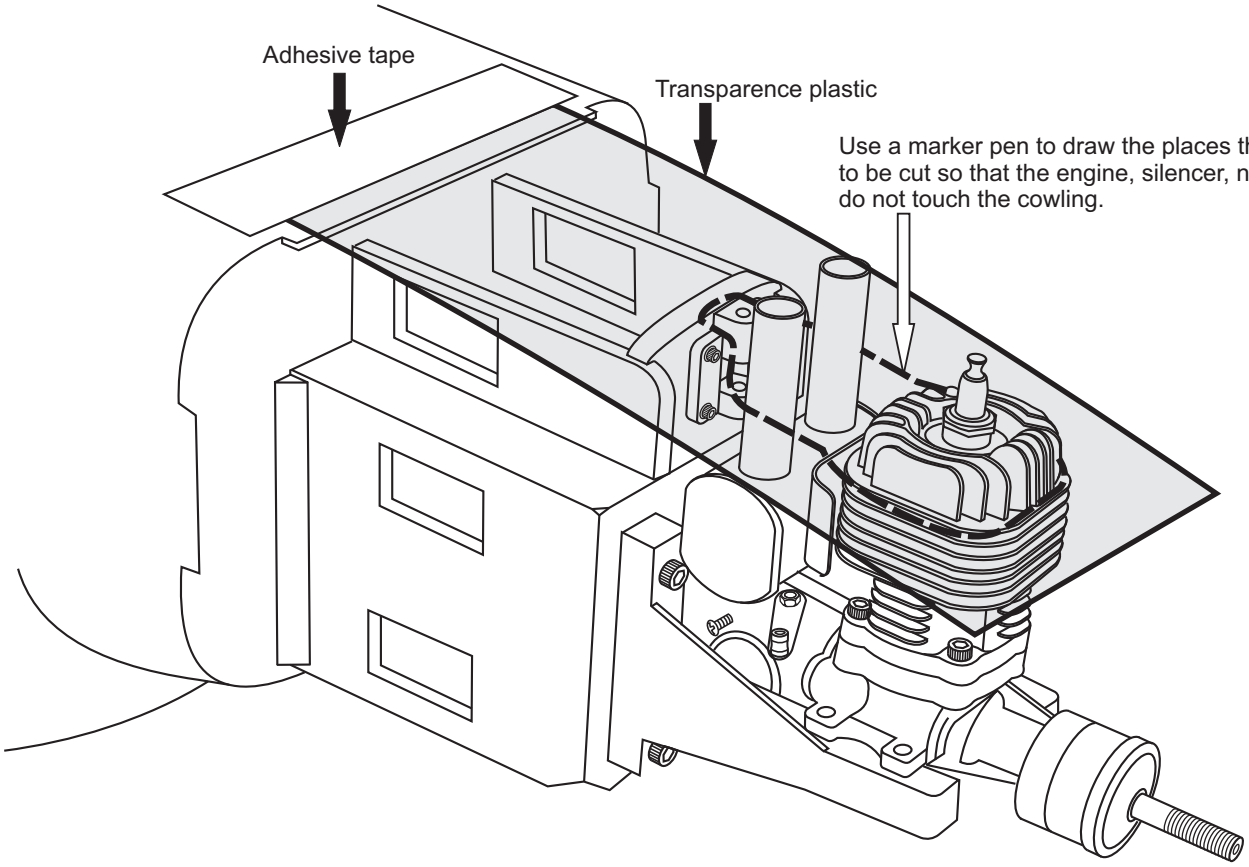

Use a marker pen to draw the places that need to be cut so that the engine, silencer, nose gear do not touch the cowling.

Remove the engine from the engine mount.

Attach the cowling to the fuselage so that the length from the fire-wall to the front of the cowling is 140mm.

Using the transparence plastic as a template, draw the area to be cut of on the cowling as shown.

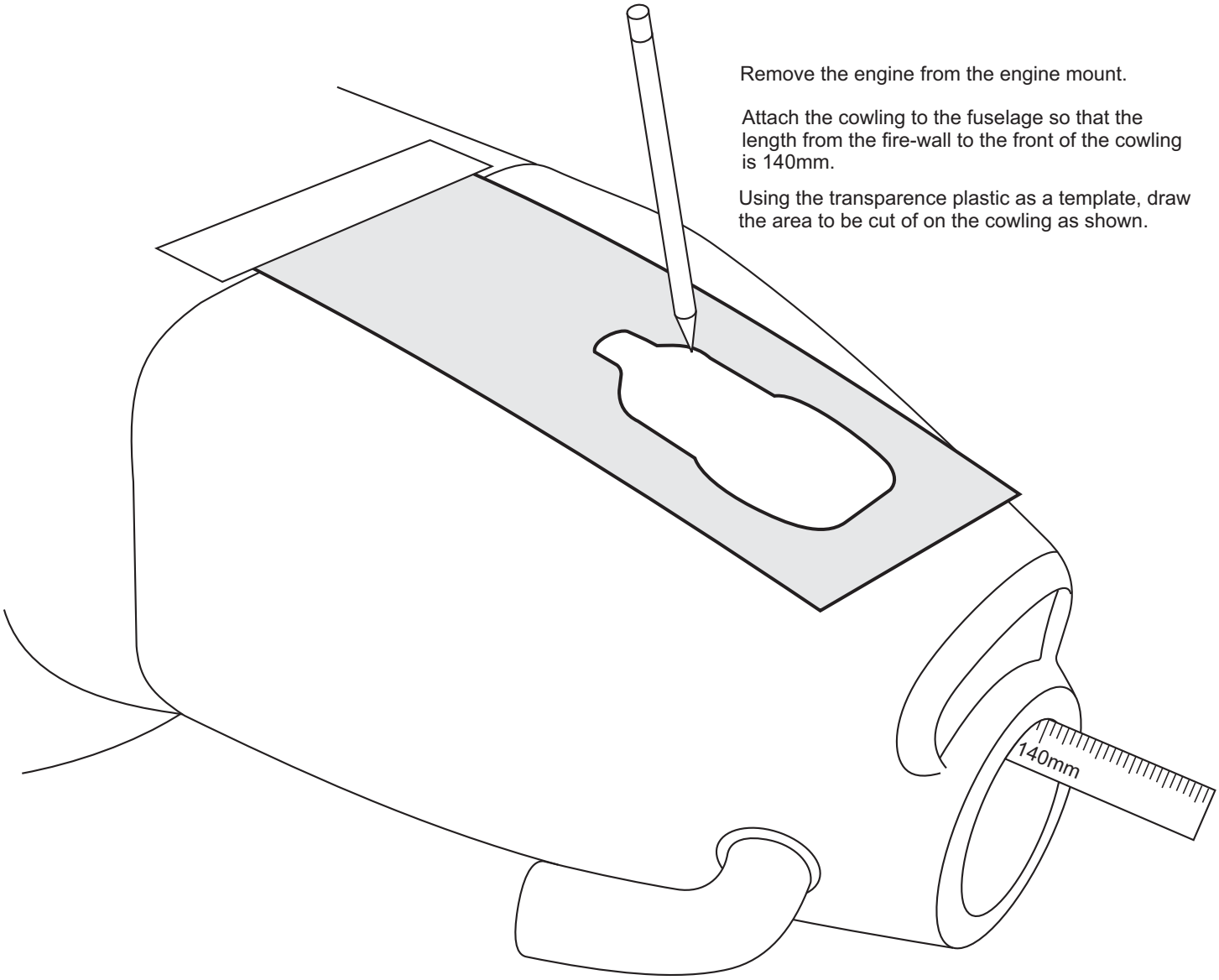

QUEST KODIAK 28- Cowling

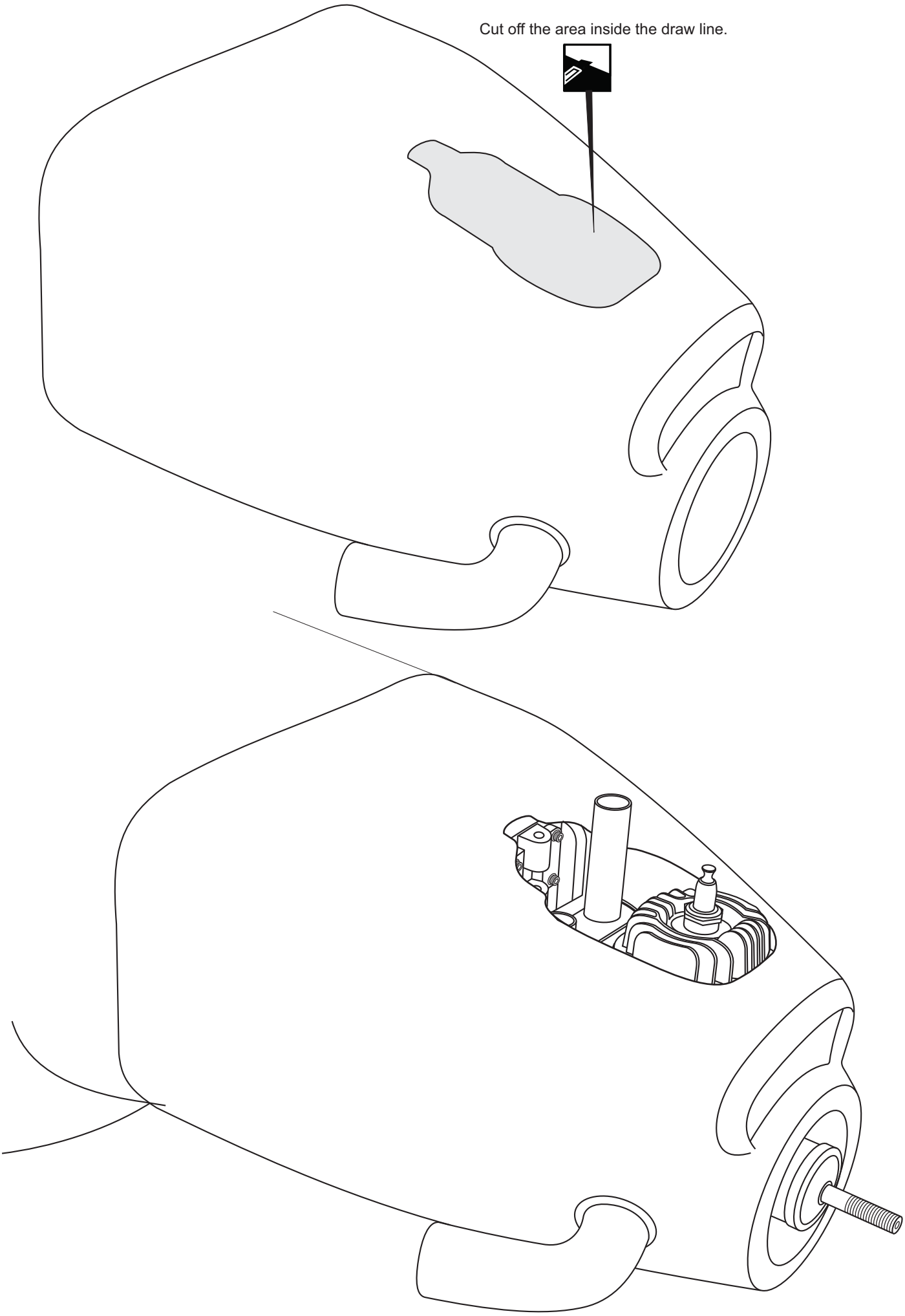

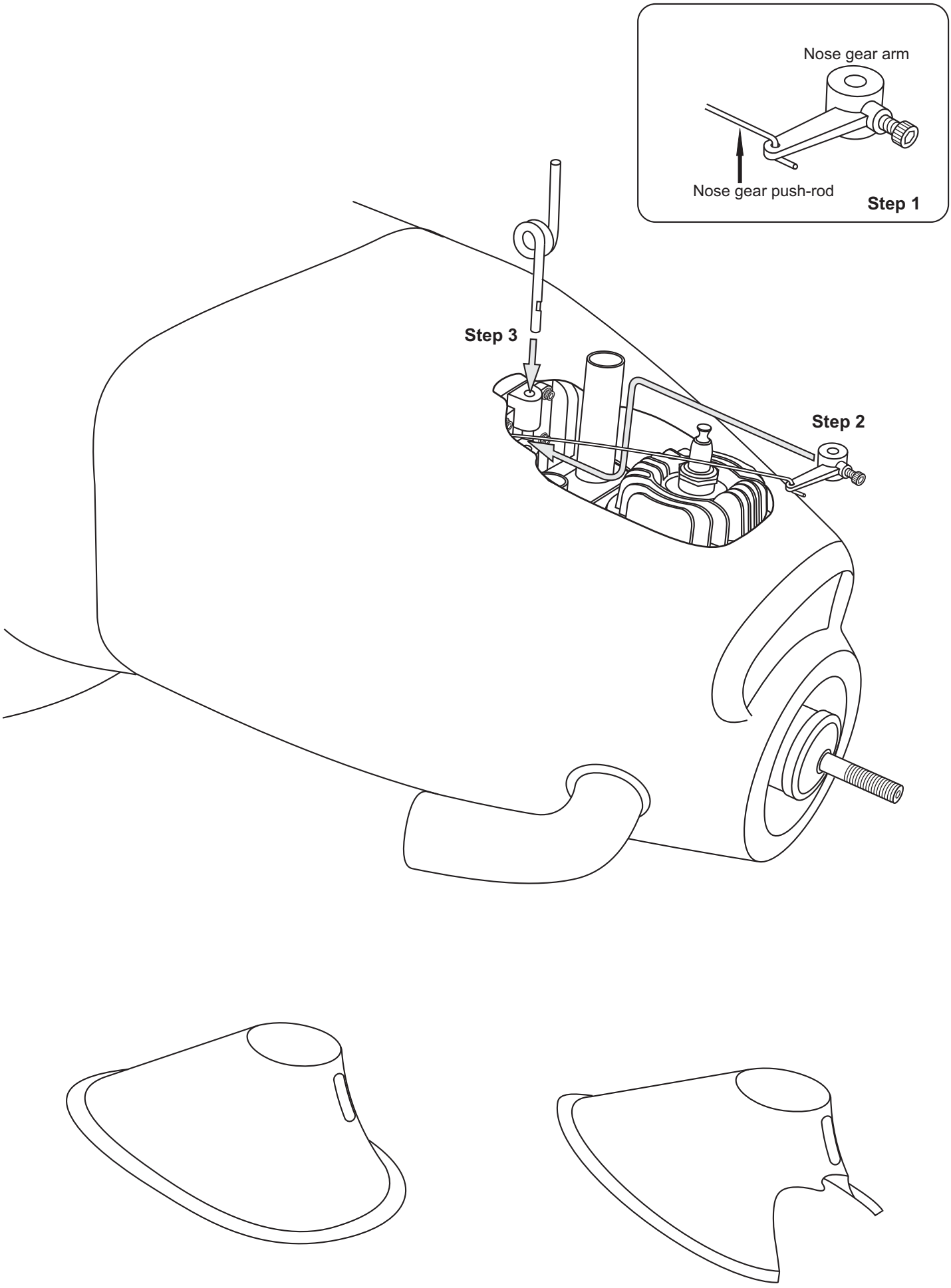
Nose gear arm
Nose gear push-rod
Step 1
Step 3
Step 2

QUEST KODIAK 30- Nose gear

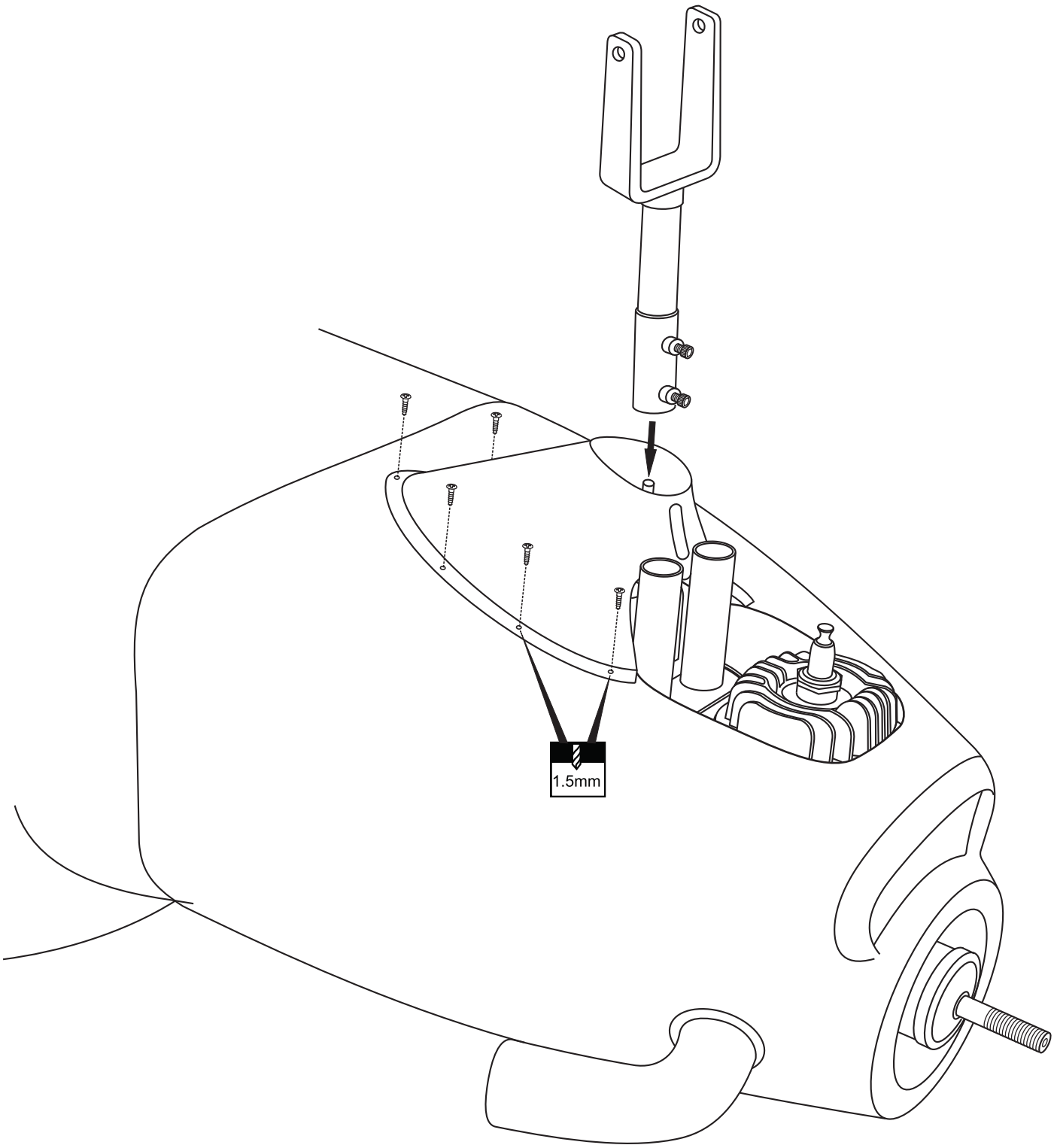

2x8mm self-drilling screw
.....9

QUEST KODIAK 31- Nose wheel

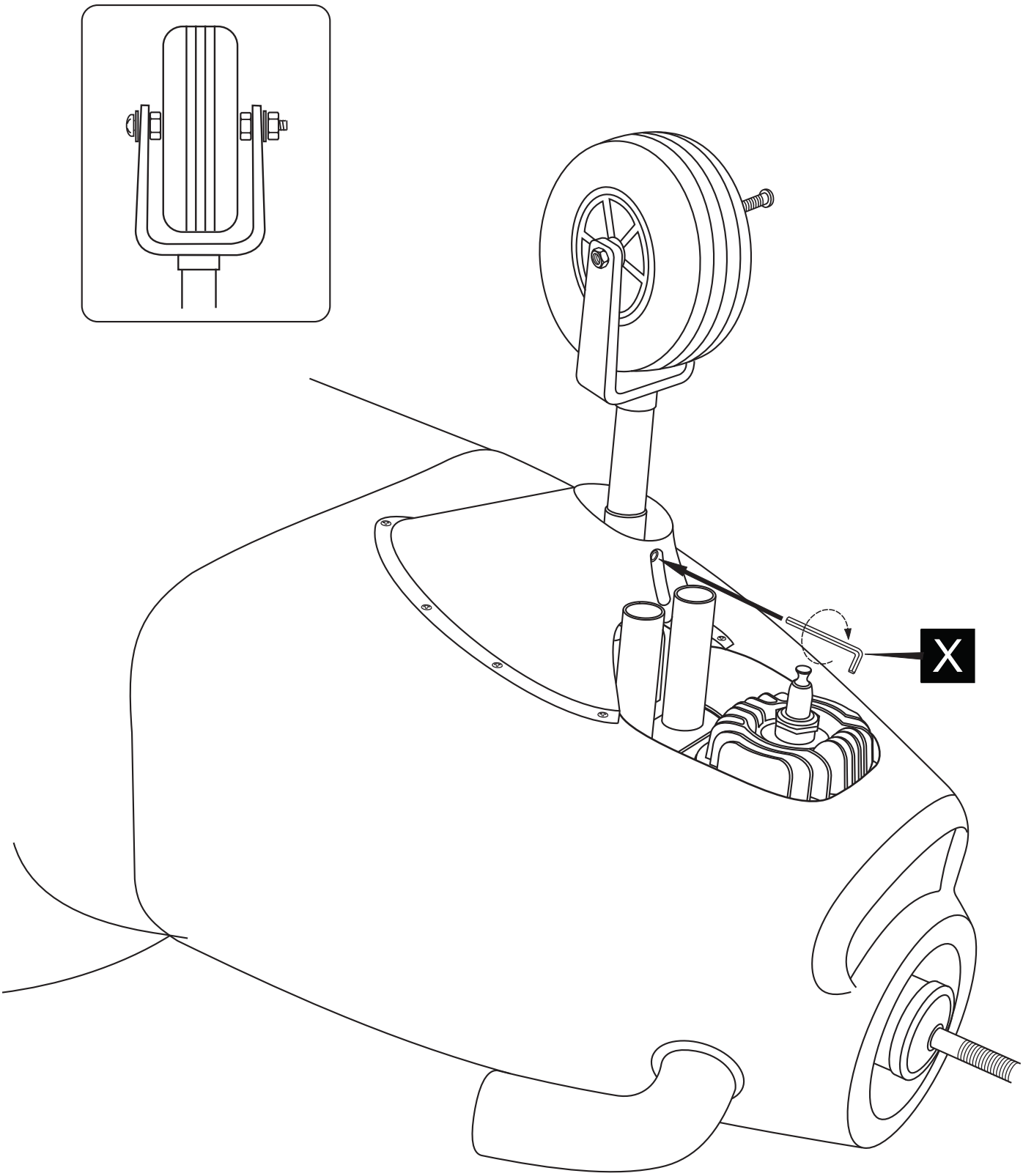

4x40mm screw ...1

4mm washer ...2

4mm nut ...3

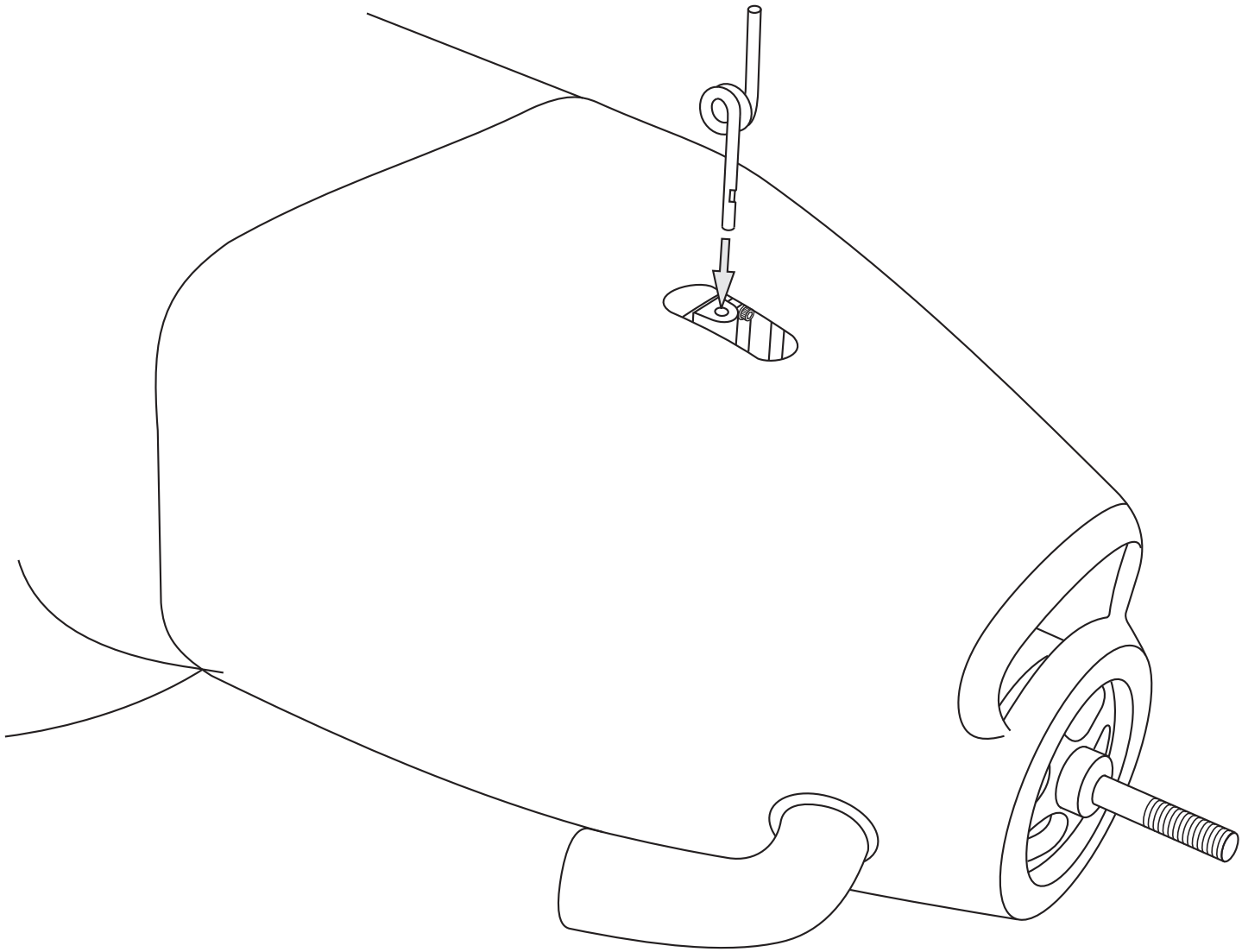

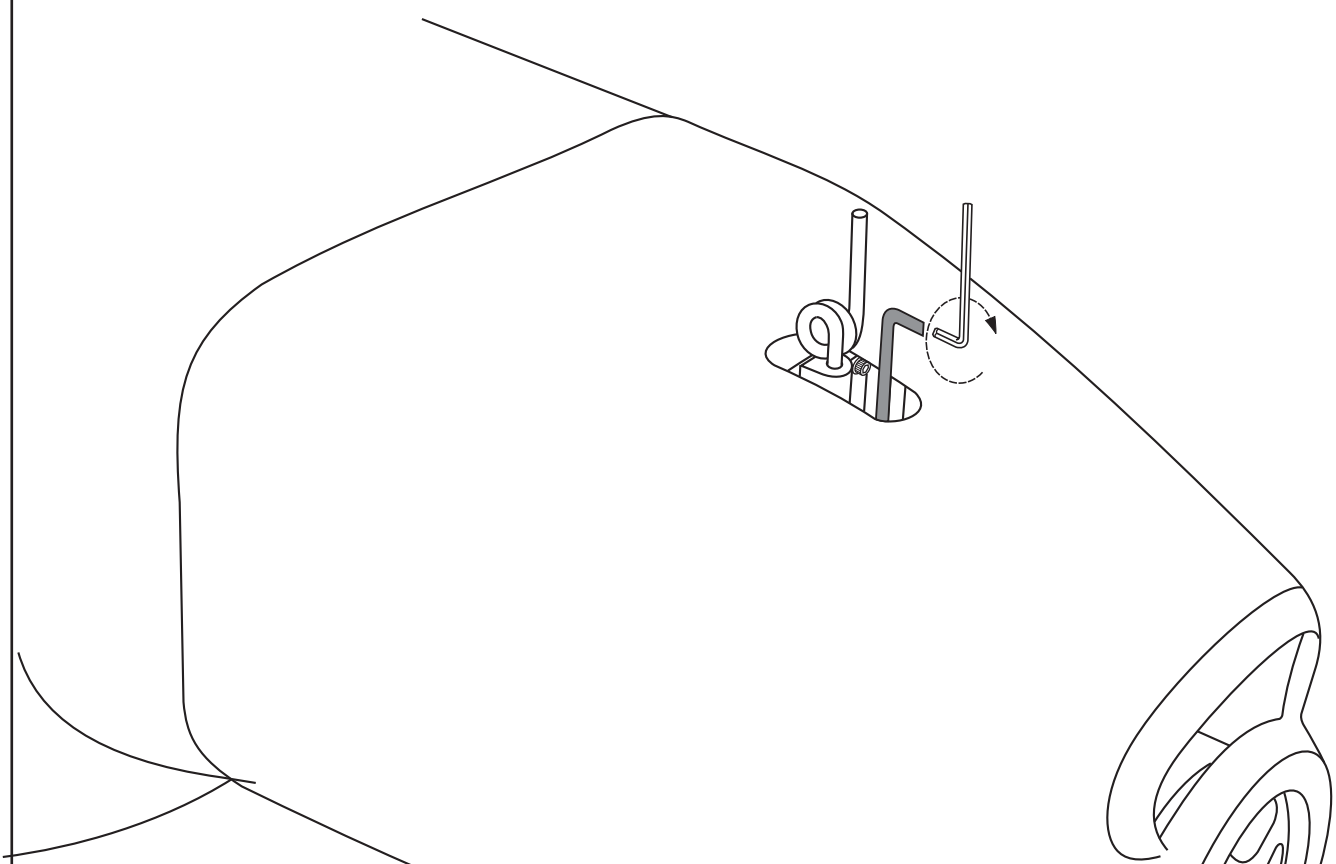

QUEST KODIAK 33- Nose wheel (in case of Electric motor using)

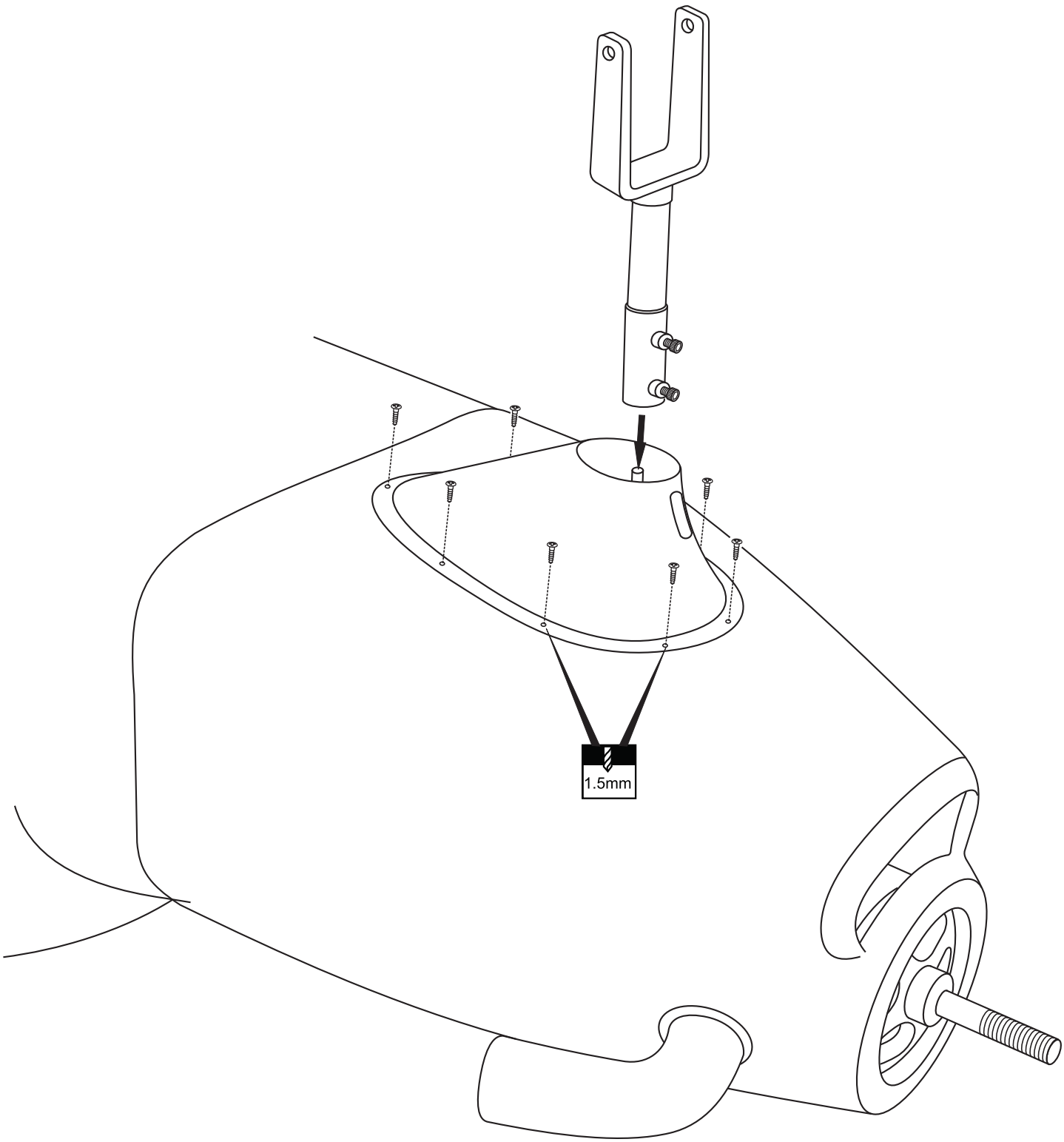

2x8mm self-drilling screw
.....12

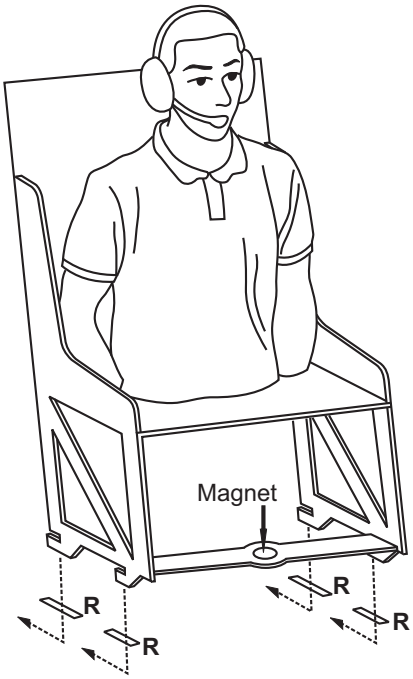

R=Rectangular slots on the floor.

Put the pilot seat in place: Press the 4 ledges under the base of the pilot's seat into the 4 slots in the floor of the plane. Gently push the seat back until it can't be pushed any more.

Remove the pilot's seat: gently push the seat forward and lift it.

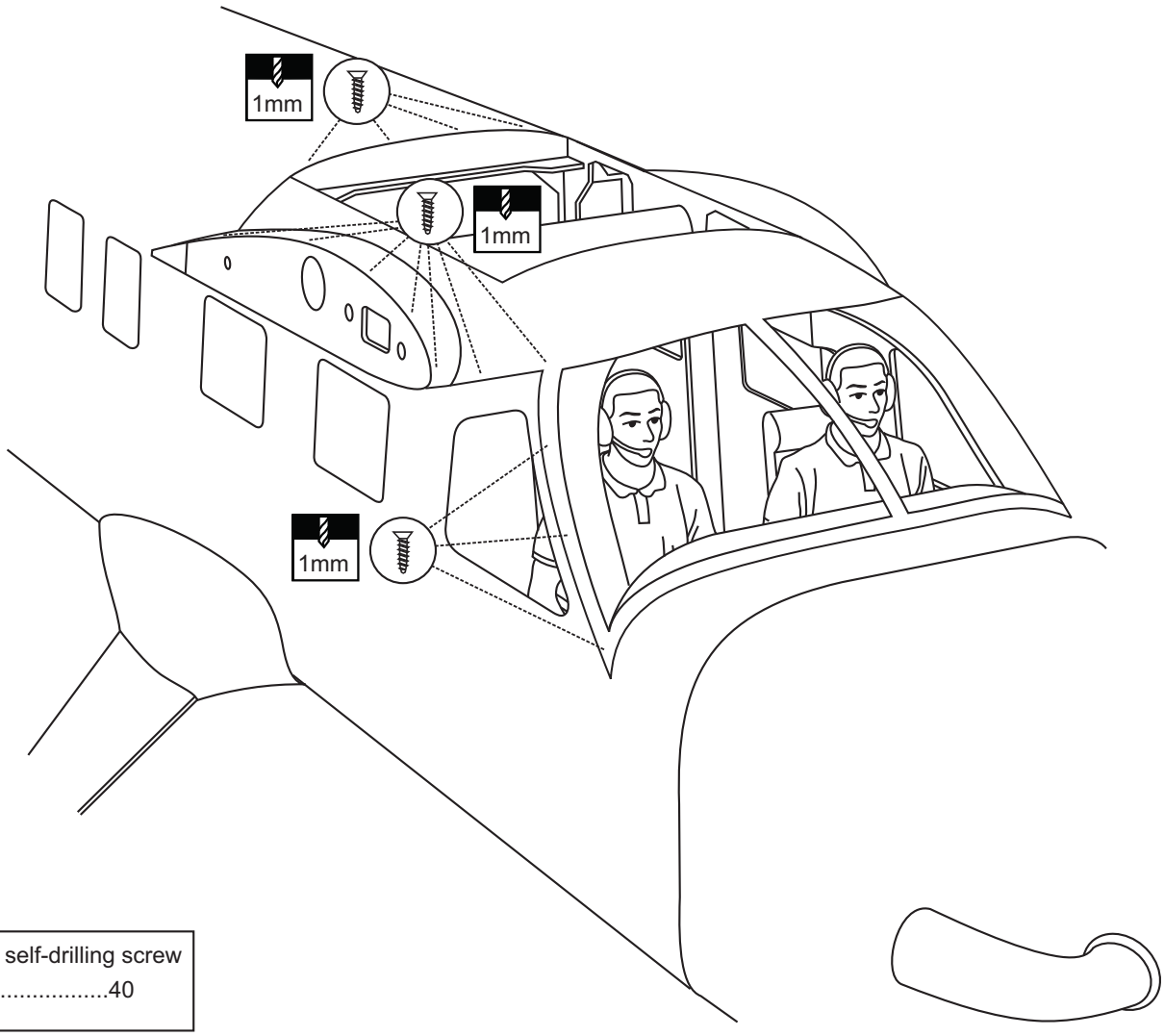

1.2x8mm self-drilling screw
.....40

QUEST KODIAK 35- Installing the wings

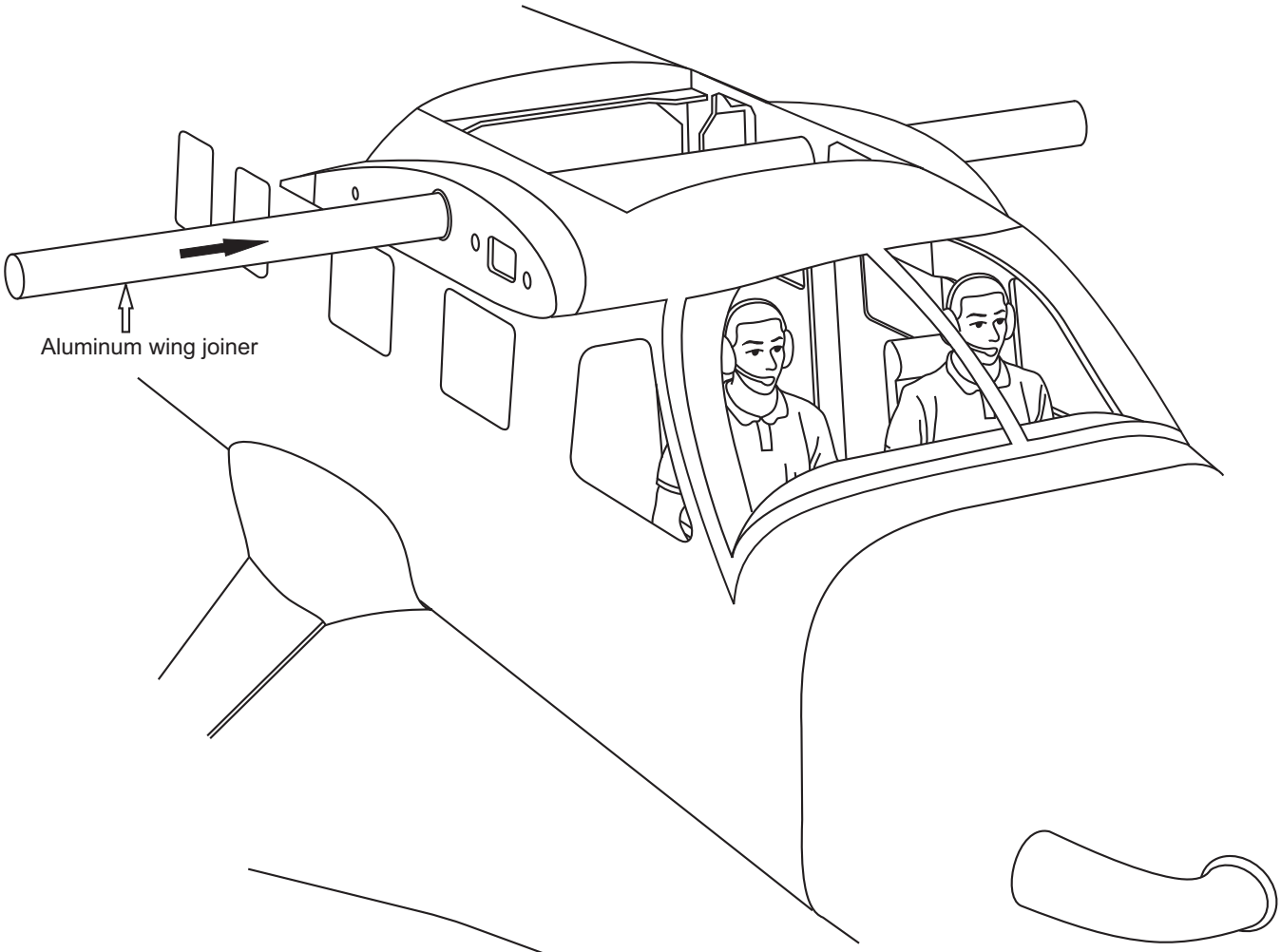

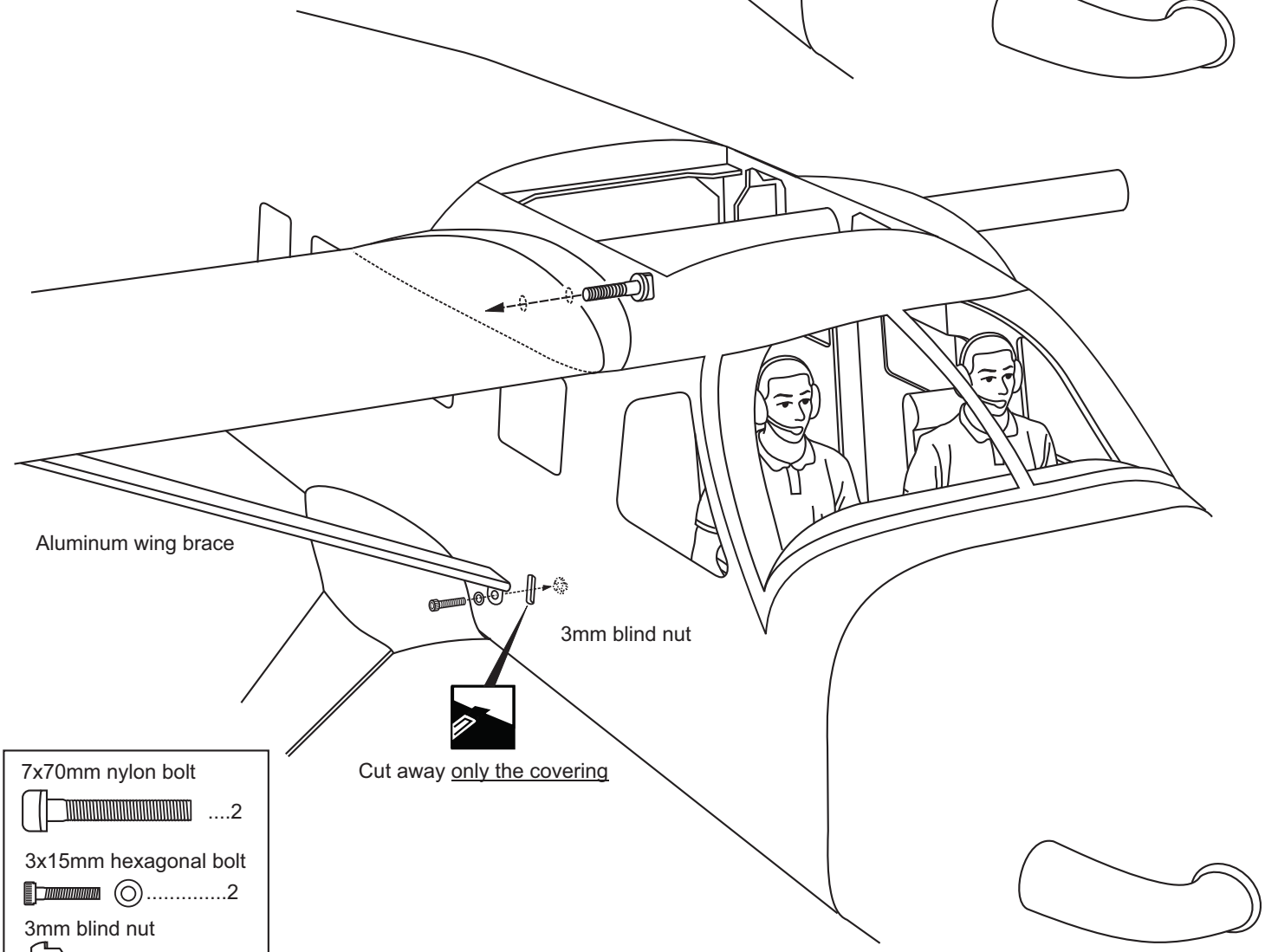

7x70mm nylon bolt 2

3x15mm hexagonal bolt 2

3mm blind nut 2

QUEST KODIAK 36- Top hatch

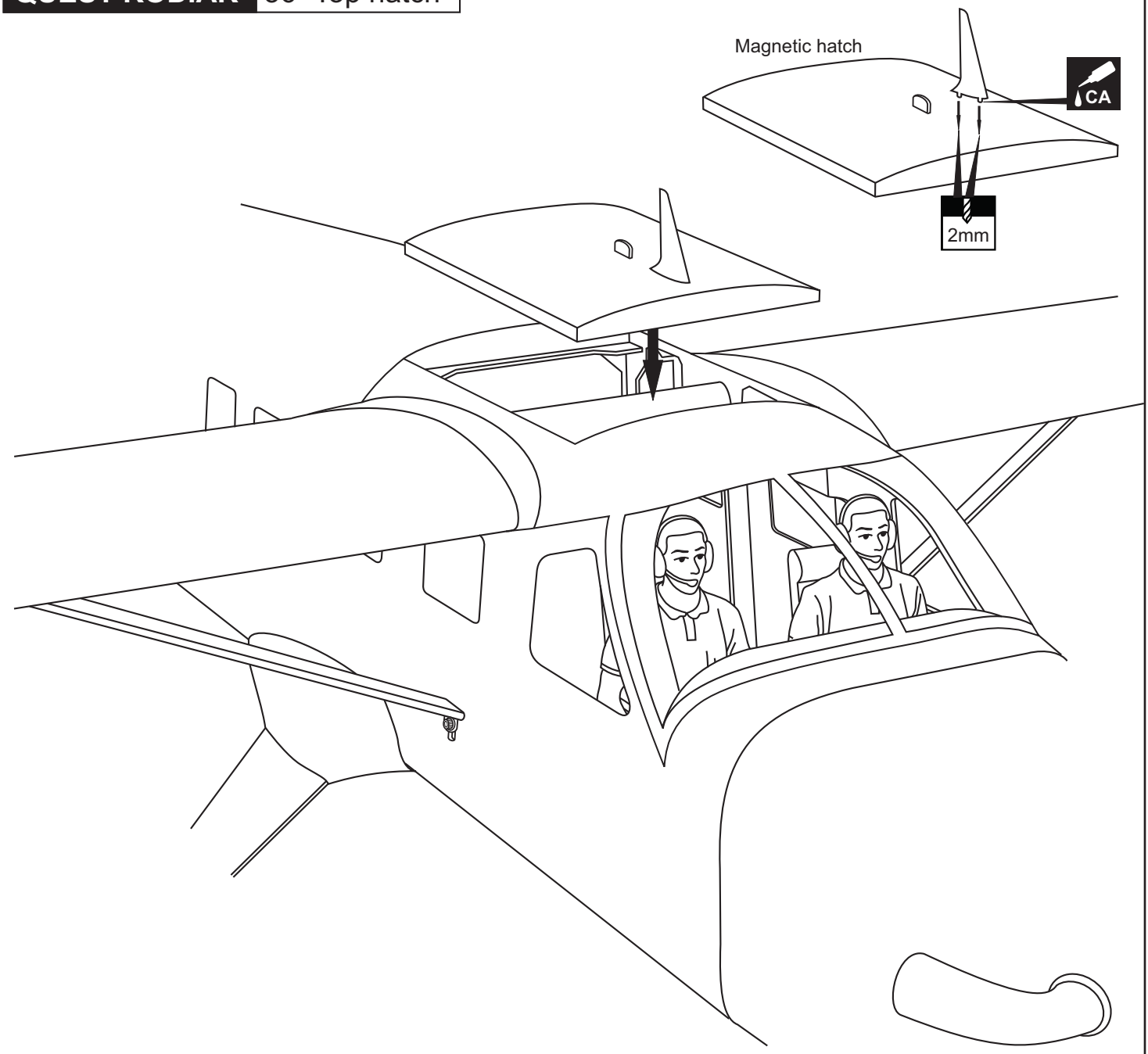

37- Sticker

IMPORTANT: Please do not clean your model with strong solvent or pure alcohol, only use kerosene to keep the colour of your model not fade.

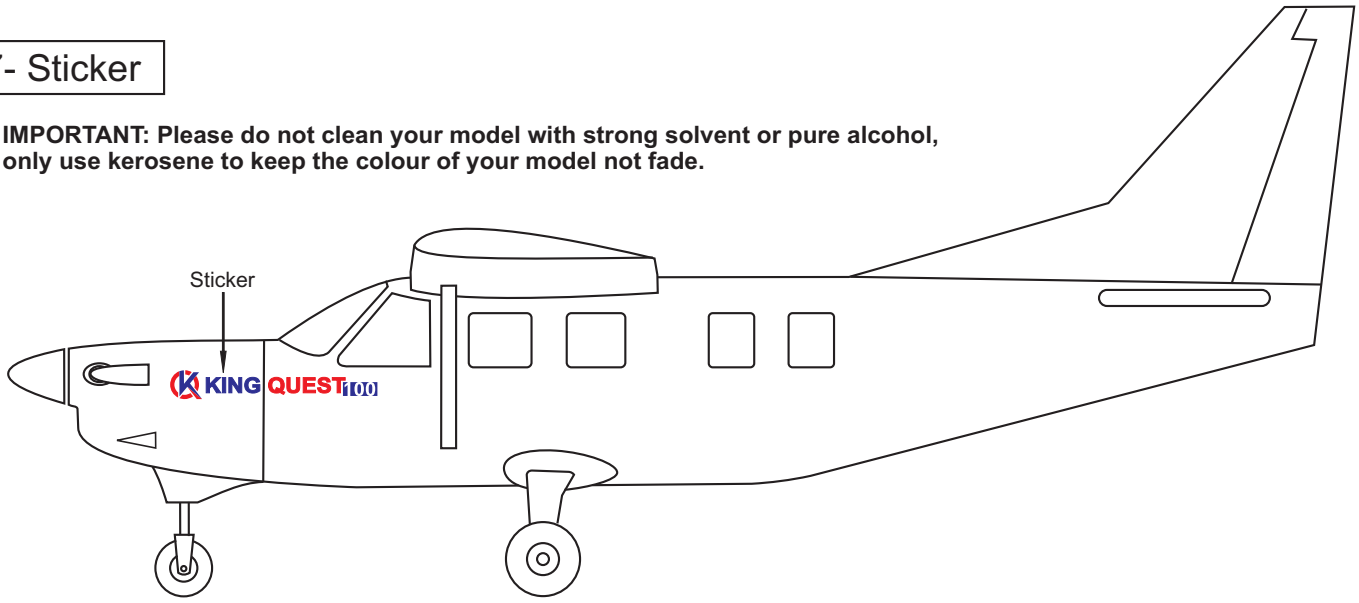

THE CENTER OF GRAVITY IS LOCATED 92 - 97mm BACK FROM THE LEADING EDGE OF THE WING, AT THE FUSELAGE. BALANCE A PLANE UPSIDE DOWN WITH THE FUEL TANK EMPTY.

DO NOT try to fly an out-of-balance model !

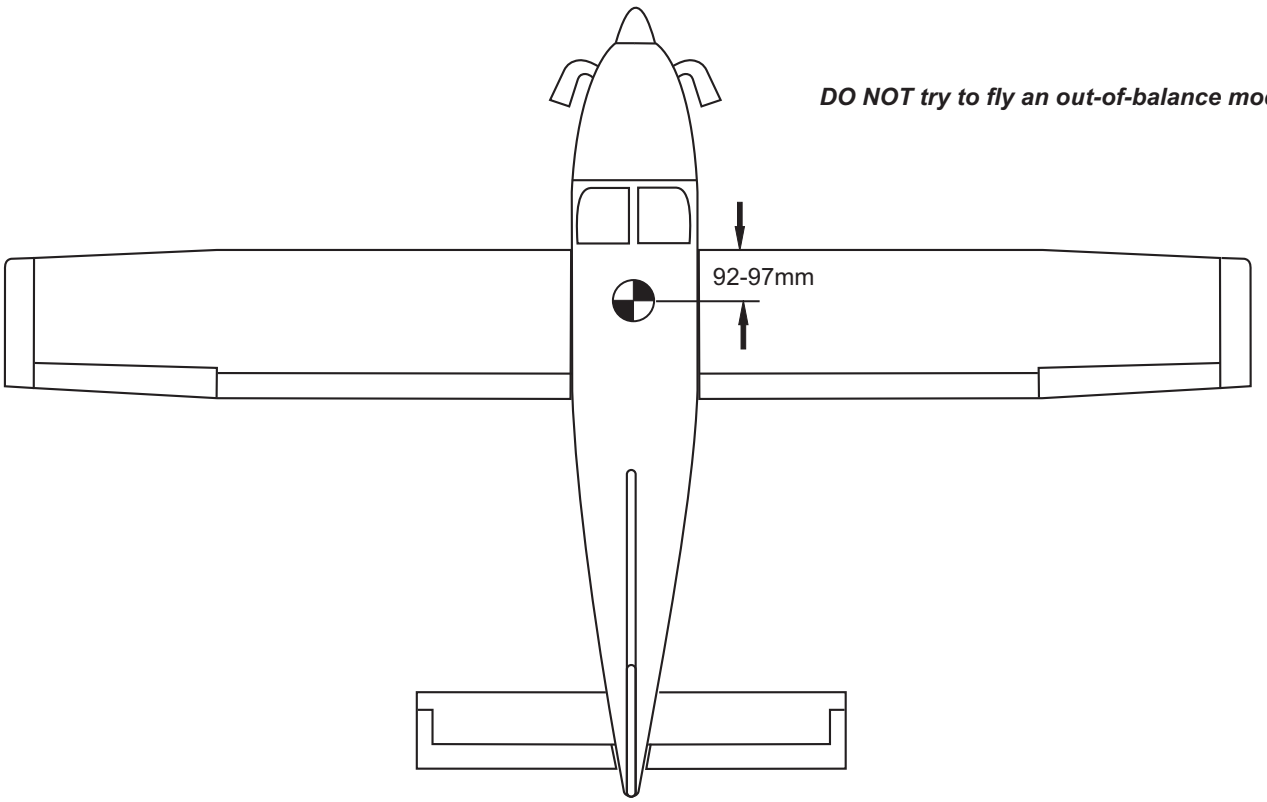

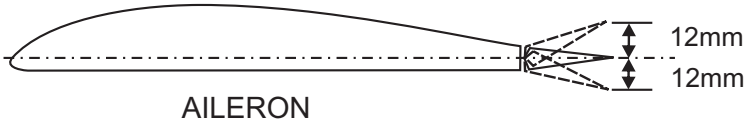

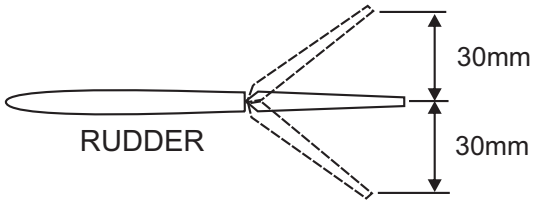

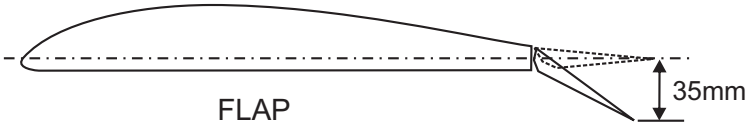

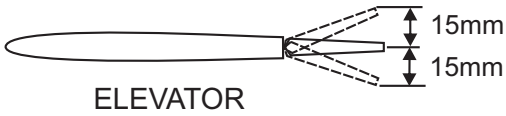

IMPORTANT: Flying your model at these throws will provide you with the greatest chance for successful first flights. If, after you have become accustomed to the way the King Quest flies, you would like to change the throws to suit your taste that is fine. However, too much control throw could make the model difficult to control, so remember, “more is not always better”.

BEFORE FLYING CHECK EVERYTHING

Before each flight, inspect the airplane for any loose parts. Check the hinges, make sure the pushrods are still firmly attached, and check the engine mounting bolts. In general, check everything on the plane that might possibly come loose.